Excellent Integrated System Limited

Stocking Distributor

Click to view price, real time Inventory, Delivery & Lifecycle Information:

Panduit
PV10-10LFX-D

For any questions, you can email us directly:
sales@integrated-circuit.com

Distributor of Panduit: Excellent Integrated System Limited
Datasheet of PV10-10LFX-D - TERM FORK L/EXP VYL 12-10AWG #10
Contact us: sales@integrated-circuit.com Website: www.integrated-circuit.com

THIS COPY IS PROVIDED ON A RESTRICTED BASIS AND IS NOT TO BE USED IN ANY WAY DETRIMENTAL TO THE INTERESTS OF PANDUIT CORP.

PANDUIT PART NUMBER	STUD SIZE	DIMENSIONS in.				
		A ±.03	W ±.01	C MIN	M ±.03	H ±.01
PV10-6LFX	#6	1.09 (27.69)	.30 (7.62)	.23 (5.84)	.85 (21.59)	.14 (3.56)
PV10-8LFX	#8	1.12 (28.45)	.30 (7.62)	.23 (5.84)	.86 (21.84)	.16 (4.06)
PV10-10LFX	#10	1.12 (28.45)	.34 (8.64)	.23 (5.84)	.86 (21.84)	.19 (4.83)
PV10-14LFX	1/4"	1.25 (31.75)	.46 (11.68)	.32 (8.13)	.97 (24.64)	.25 (6.35)

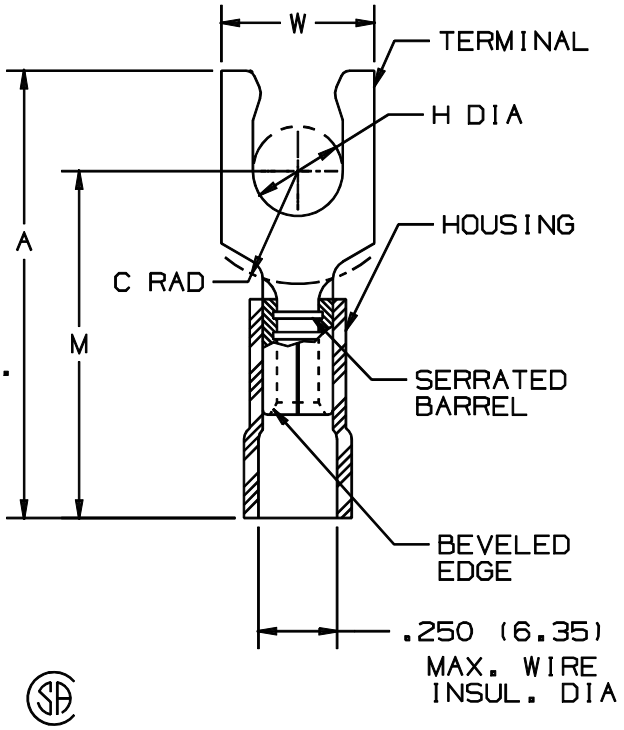

NOTES:

1. UL LISTED AND CSA CERTIFIED FOR:
   A. 600V. MAX. BLDG WIRE
   (1000 V. MAX IN SIGNS, FIXTURES & LUMINAIRES),
   AND 12-10 AWG STRANDED COPPER WIRE ONLY
   & 221°F (105°C MAX) TEMP RATING
   WITH THE CT-550,CT1550 & CT1551 INSTALLATION TOOLS.
2. MATERIAL:
   A. STAMPING - .04" (1.02) THK COPPER, TIN PLATED
   B. HOUSING - VINYL, YELLOW
3. STRIP LENGTH - 5/16 $^{+1/32}_{-0}$
4. PACKAGE QTY:
   -L=50
   -D=500
5. DIMENSIONS IN BRACKETS ARE IN MILLIMETERS

LISTED 587H E52164

CERTIFIED LR31212

A41224_06

REV	DATE	BY	CHK	DESCRIPTION	ECN	QA	CUST	PM
06	1/01	KMD		CAD FILE SPEC. WAS N41224AA_PCD_05				
05	1/97	JAMB		UPDATE NOTES	05449			
04	9/94	MS	RLS	REVISED NOTES AND DIMENSIONS	02481		TJP	JM
03	7-88	DW		REDRAWN WITH REVISIONS				

PANDUIT CORP. TINLEY PARK, ILLINOIS

#12-10 BARREL VINYL INSULATED LOCKING FORK, .250 (6.35) MAX. INSULATION DIAMETER

DRAWN BY	CHK'D	SCALE	DRAWING NO.
DAW		NONE	A41224