Excellent Integrated System Limited

Stocking Distributor

Click to view price, real time Inventory, Delivery & Lifecycle Information:

Panduit
PV22-2F-C

For any questions, you can email us directly:
sales@integrated-circuit.com

Distributor of Panduit: Excellent Integrated System Limited
Datasheet of PV22-2F-C - TERM FORK VYL 26-22AWG #2
Contact us: sales@integrated-circuit.com Website: www.integrated-circuit.com

THIS COPY IS PROVIDED ON A RESTRICTED BASIS AND IS NOT TO BE USED IN ANY WAY DETRIMENTAL TO THE INTERESTS OF PANDUIT CORP.

PANDUIT PART NUMBER	STUD SIZE	DIMENSIONS in.				
		A ±.020	W ±.010	C ±.015	M ±.020	H ±.010
PV22-2F	#2	.61 (15.50)	.20 (5.08)	.19 (4.85)	.55 (13.97)	.10 (2.54)

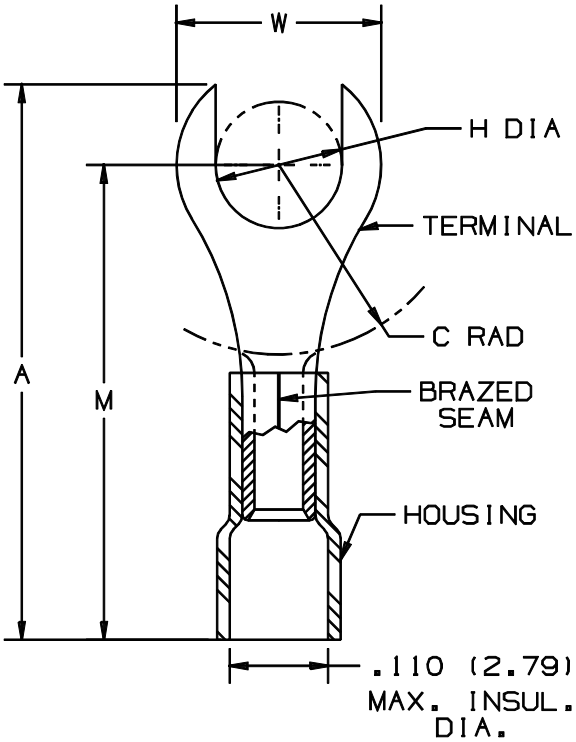

NOTES:

1. RECOMMENDED FOR:
   A. 600V. MAX. VOLTAGE RATING
   B. #26-22 AWG SOLID OR STRANDED COPPER WIRE
   C. 221° F (105° C) MAX. TEMP. RATING
2. MATERIAL:
   A. STAMPING - .020 (0.51) THK COPPER, TIN PLATED
   B. HOUSING - VINYL, YELLOW
3. PACKAGE QTY: STD. PKG. 100
   BULK PKG. 1000
4. DIMENSIONS IN BRACKETS ARE IN MILLIMETERS
5. INSTALLATION TOOLS: CT-520

A41231_03

REV	DATE	BY	CHK	DESCRIPTION	QA	CUST	PM	APP
03	1/01	RM		FILESPEC WAS A41231A::1:L1				
2	7-88	DW		REDRAWN WITH REVISIONS				

PANDUIT CORP. TINLEY PARK, ILLINOIS

#26-22 BARREL VINYL INSULATED FORK, .110 (2.79) MAX. WIRE INSUL. DIA.

DRAWN BY	CHK'D	SCALE	DRAWING NO.
DAW		NONE	A41231