Excellent Integrated System Limited

Stocking Distributor

Click to view price, real time Inventory, Delivery & Lifecycle Information:

Molex Connector Corporation
0873813674

For any questions, you can email us directly:
sales@integrated-circuit.com

Distributor of Molex Connector Corporation: Excellent Integrated System Limited
Datasheet of 0873813674 - Connector Receptacle 36 Position 0.079" (2.00mm) Gold Surface Mount

Contact us: sales@integrated-circuit.com Website: www.integrated-circuit.com

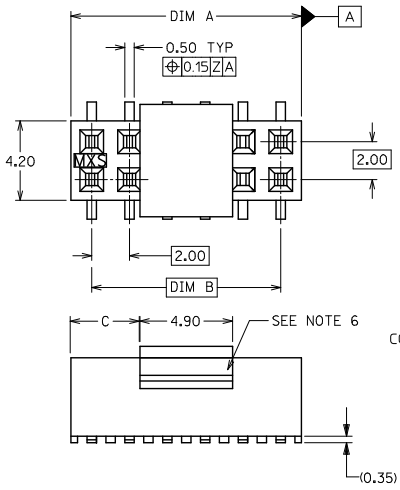

PART NO. LEGEND
FOR TUBE PACKAGING ONLY

87381 - ** * *

CIRCUIT SIZE

PLATING (SEE NOTE 1)
3
4
5

6 COVER
7 NO COVER

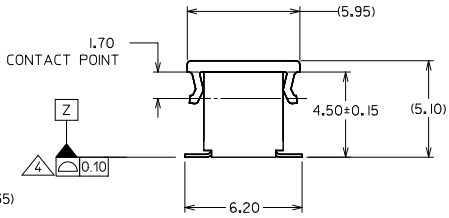

PART NUMBER	CKT. SIZE	DIM A	DIM B	DIM C
87381-06**	6	6.00	4.00	0.55
87381-08**	8	8.00	6.00	1.55
87381-10**	10	10.00	8.00	2.55
87381-12**	12	12.00	10.00	3.55
87381-14**	14	14.00	12.00	4.55
87381-16**	16	16.00	14.00	5.55
87381-18**	18	18.00	16.00	6.55
87381-20**	20	20.00	18.00	7.55
87381-22**	22	22.00	20.00	8.55
87381-24**	24	24.00	22.00	9.55
87381-26**	26	26.00	24.00	10.55
87381-28**	28	28.00	26.00	11.55
87381-30**	30	30.00	28.00	12.55
87381-32**	32	32.00	30.00	13.55
87381-34**	34	34.00	32.00	14.55
87381-36**	36	36.00	34.00	15.55
87381-38**	38	38.00	36.00	16.55
87381-40**	40	40.00	38.00	17.55
87381-42**	42	42.00	40.00	18.55
87381-44**	44	44.00	42.00	19.55
87381-46**	46	46.00	44.00	20.55
87381-48**	48	48.00	46.00	21.55
87381-50**	50	50.00	48.00	22.55

NOTES:
1. PLATING FINISH:
   3 - 0.76um MIN. GOLD IN CONTACT AREA 1.27um MIN. TIN IN SOLDER TAIL AREA BOTH OVER 1.27um MIN. NICKEL OVERALL
   4 - 0.38um MIN. GOLD IN CONTACT AREA 1.27um MIN. TIN IN SOLDER TAIL AREA BOTH OVER 1.27um MIN. NICKEL OVERALL
   5 - 0.05um MIN. GOLD FLASH IN CONTACT AREA 1.90um MIN. TIN IN SOLDER TAIL AREA BOTH OVER 1.27um MIN. NICKEL OVERALL
2. 12 CKT SIZE SHOWN FOR ASSY ILLUSTRATION ONLY. (SEE CHART FOR ALL PART SIZES), 6 CKT & 30 CKT ILLUSTRATED FOR TAPE/REEL VERSION ON SHT 2.
3. PRODUCT SPECIFICATION PS-87380 APPLIES.
4. COPLANARITY OF SOLDER TAILS ARE TO BE MEASURED BY RESTING THE PART ON A FLAT GAUGE SURFACE +0.05 UPWARDS AND -0.05 DOWNWARDS.
5. TUBE PACKAGING STANDARD.
6. COVER IS OPTIONAL. SEE LEGEND.
7. PARTS SHALL BE PACKED IN MOISTURE BARRIER BAG.
8. REFER SHT 3 FOR P/N: 87381-6000 T&R ILLUSTRATION.

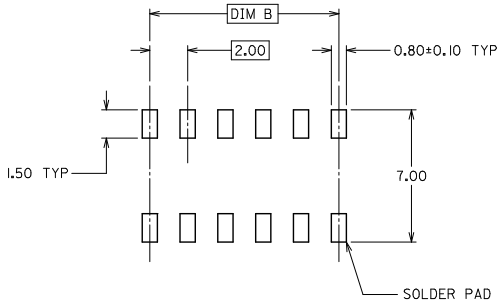

RECOMMENDED PCB LAYOUT

REV	DESCRIPTION
E11	REVISE NOTE 4. EC NO: S2012-0026 DRWN:SKANG CHKD:ATSEE APPR:MLONG 2011/07/29 2011/08/03 2011/08/03

QUALITY SYMBOLS: E4=0, E6=0, E8=0

GENERAL TOLERANCES (UNLESS SPECIFIED)

	mm	INCH
4 PLACES	± ---	± ---
3 PLACES	± ---	± ---
2 PLACES	± 0.20	± ---
1 PLACE	± ---	± ---
ANGULAR ± 3 °		

DRAFT WHERE APPLICABLE MUST REMAIN WITHIN DIMENSIONS

DIMENSION STYLE: MM ONLY
SCALE: NTS
DESIGN UNITS: METRIC
THIRD ANGLE PROJECTION

		DATE
DRAWN BY	JAMES	1998/01/08
CHECKED BY	LCHANG	1999/04/23
APPROVED BY	SQUEK	1999/04/26

TITLE: MGRID, TOP ENTRY RECEPT. 4.50MM HT., SMT

MOLEX INCORPORATED

MATERIAL NO.: SEE TABLE
DOCUMENT NO.: SD-87381-**6*
SHEET NO.: 1 OF 4
SIZE: A3

THIS DRAWING CONTAINS INFORMATION THAT IS PROPRIETARY TO MOLEX INCORPORATED AND SHOULD NOT BE USED WITHOUT WRITTEN PERMISSION

tb_frame_A3_P_AM_T
Rev. F 2009/06/18

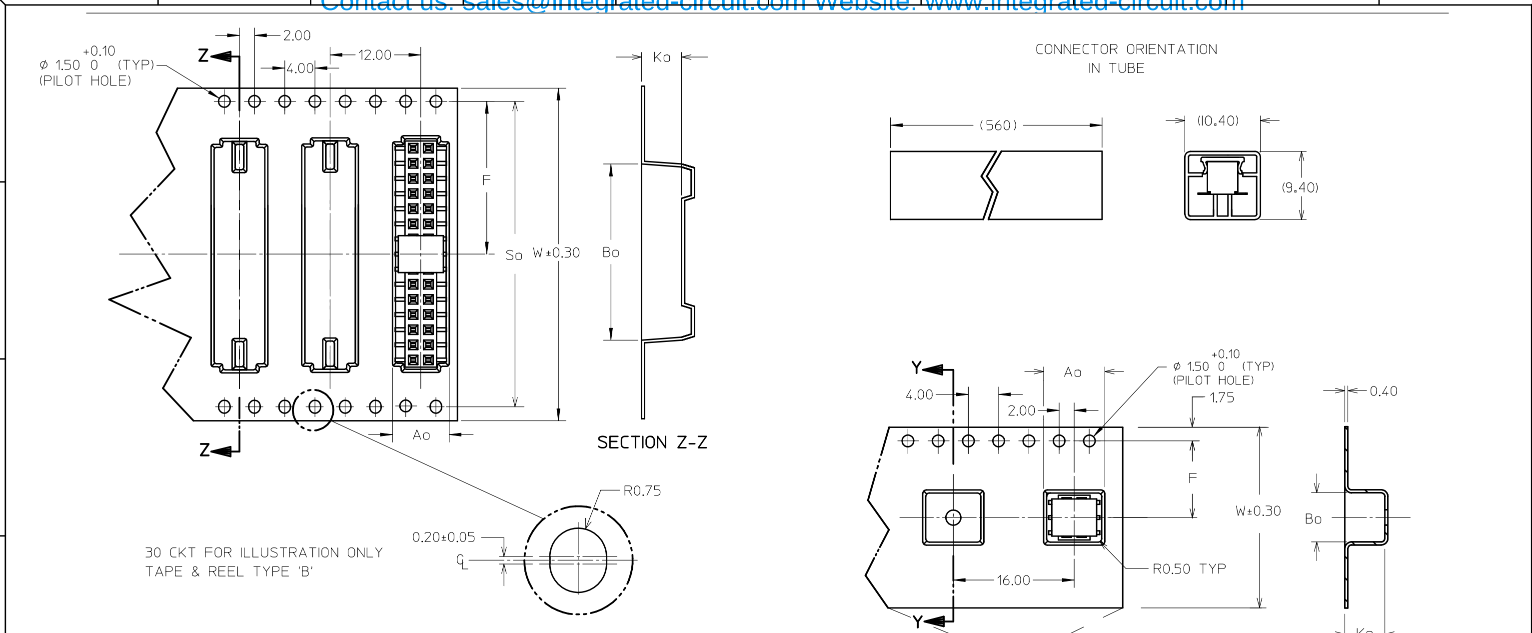

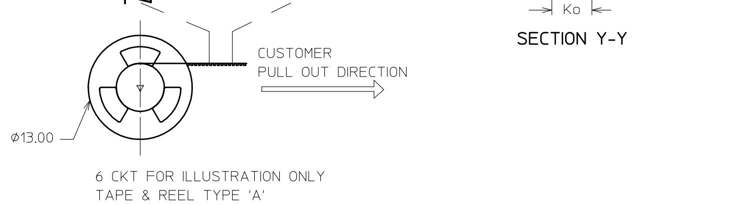

NOTES:

1. LEADER AND TRAILER TAPE

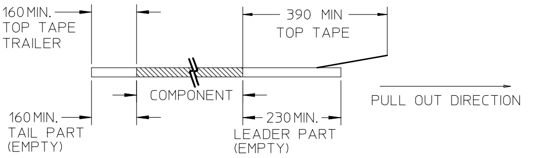

2. PEELING OFF FORCE OF THE TOP TAPE: 20-80gf.
(PEELING DIRECTION AS SHOWN IN FOLLOWING FIGURE)

3. PACKAGING STANDARD IS AS PER EIA-481.
4. TAPE & REEL QUANTITY = SEE TABLE

REVISE NOTE 4. EC NO: S2012-0026 2011/07/29
DRWN:SKANG 2011/08/03
CH'KD:ATSEE 2011/08/03
APPR:MLONG
DESCRIPTION
E11 REV

QUALITY SYMBOLS	GENERAL TOLERANCES (UNLESS SPECIFIED)	mm	INCH
F/A =0	4 PLACES	± ---	± ---
F/C =0	3 PLACES	± ---	± ---
F/P =0	2 PLACES	± 0.20	± ---
	1 PLACE	± ---	± ---
	ANGULAR ± 3 °		
	DRAFT WHERE APPLICABLE MUST REMAIN WITHIN DIMENSIONS		

DIMENSION STYLE: MM ONLY	SCALE: NTS	DESIGN UNITS: METRIC — THIRD ANGLE PROJECTION
DRAWN BY: JAMES, DATE: 1998/01/08	TITLE: MGRID, TOP ENTRY RECEPT. 4.50MM HT., SMT	
CHECKED BY: LCHANG, DATE: 1999/04/23		
APPROVED BY: SQUEK, DATE: 1999/04/26	molex MOLEX INCORPORATED	
MATERIAL NO.: SEE TABLE	DOCUMENT NO.: SD-87381-**6*	SHEET NO.: 2 OF 4
SIZE: A3	THIS DRAWING CONTAINS INFORMATION THAT IS PROPRIETARY TO MOLEX INCORPORATED AND SHOULD NOT BE USED WITHOUT WRITTEN PERMISSION	

tb_frame_A3_P_AM_T
Rev. F 2009/06/18

Contact us: sales@integrated-circuit.com Website: www.integrated-circuit.com

CKT SIZE	PART NO. WITH CAP IN TUBE	PART NO. WITH CAP IN TAPE / REEL	W	So	Ao	F	Bo	Ko	T&R TYPE (SHT 2)	T&R QTY PER REEL
6	87381-0664	87381-9002	24	-	7.00	11.50	6.50	5.30	A	500
8	87381-0864	87381-9003	24	-	7.00	11.50	8.50	5.30	A	600
10	87381-1064	87381-9005	24	-	7.00	11.50	10.50	5.30	A	680
14	87381-1464	87381-9006	32	28.40	7.20	14.20	14.50	5.30	B	750
16	87381-1664	87381-9004	32	28.40	7.20	14.20	16.50	5.30	B	800
18	87381-1864	87381-1800	32	28.40	7.20	14.20	18.50	5.30	B	750
20	87381-2063	87381-2000	32	28.40	7.20	14.20	20.50	5.30	B	800
22	87381-2264	87381-2200	44	40.40	7.20	20.20	22.50	5.30	B	500
30	87381-3064	87381-3000	44	40.40	7.20	20.20	30.50	5.30	B	500
32	87381-3264	87381-3200	44	40.40	7.20	20.20	32.50	5.30	B	500
34	87381-3464	87381-3400	56	52.40	7.20	26.20	34.50	5.30	B	500
44	87381-4464	87381-4400	56	52.40	7.20	26.20	44.50	5.30	B	500
46	87381-4664	87381-4600	72	68.40	7.20	34.20	46.50	5.30	B	750
50	87381-5063	87381-5030	72	68.40	7.20	34.20	50.50	5.30	B	500
50	87381-5064	87381-5000	72	68.40	7.20	34.20	50.50	5.30	B	500

REVISE NOTE 4. 2011/07/29
EC NO: S2012-0026 2011/08/03
DRWN:SKANG 2011/08/03
CHKD:ATSEE
APPR:MLONG
DESCRIPTION
E11
REV

QUALITY SYMBOLS
E4 =0
E6 =0
E8 =0

GENERAL TOLERANCES (UNLESS SPECIFIED)

	mm	INCH
4 PLACES	± ---	± ---
3 PLACES	± ---	± ---
2 PLACES	± 0.20	± ---
1 PLACE	± ---	± ---
ANGULAR ± 3 °		

DRAFT WHERE APPLICABLE MUST REMAIN WITHIN DIMENSIONS

DIMENSION STYLE: MM ONLY
SCALE: NTS
DESIGN UNITS: METRIC
THIRD ANGLE PROJECTION

DRAWN BY: JAMES DATE: 1998/01/08
CHECKED BY: LCHANG DATE: 1999/04/23
APPROVED BY: SQUEK DATE: 1999/04/26

TITLE: MGRID, TOP ENTRY RECEPT. 4.50MM HT., SMT

molex MOLEX INCORPORATED

MATERIAL NO.: SEE TABLE
DOCUMENT NO.: SD-87381-**6*
SHEET NO.: 3 OF 4
SIZE: A3

THIS DRAWING CONTAINS INFORMATION THAT IS PROPRIETARY TO MOLEX INCORPORATED AND SHOULD NOT BE USED WITHOUT WRITTEN PERMISSION

tb_frame_A3_P_AM_T
Rev. F 2009/06/18

Distributor of Molex Connector Corporation: Excellent Integrated System Limited

Datasheet of 0873813674 - Connector Receptacle 36 Position 0.079" (2.00mm) Gold Surface Mount

Contact us: sales@integrated-circuit.com Website: www.integrated-circuit.com

CKT SIZE	PART NO. WITHOUT CAP IN TUBE	PART NO. WITHOUT CAP IN TAPE / REEL	W	So	Ao	F	Bo	Ko	T&R TYPE (SHT 2)	T&R QTY PER REEL
50	87381-5074	87381-6000 (8)	72	68.40	6.80	34.20	50.50	8.00	B	500

(8) ILLUSTRATION FOR P/N: 87381-6000
50 CKT IN T&R W/O CAP

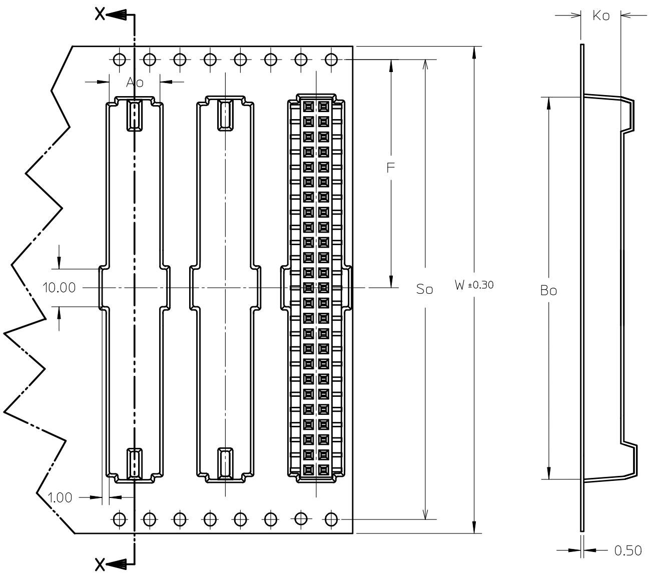

SECTION X-X

REVISE NOTE 4.	
EC NO: S2012-0026	2011/07/29
DRWN:SKANG	2011/08/03
CH'KD:ATSEE	2011/08/03
APPR:MLONG	
REV: E11	DESCRIPTION

QUALITY SYMBOLS: (F/A)=0, (F/C)=0, (F/P)=0

GENERAL TOLERANCES (UNLESS SPECIFIED)

	mm	INCH
4 PLACES	± ---	± ---
3 PLACES	± ---	± ---
2 PLACES	± 0.20	± ---
1 PLACE	± ---	± ---

ANGULAR ± 3 °

DRAFT WHERE APPLICABLE MUST REMAIN WITHIN DIMENSIONS

DIMENSION STYLE	SCALE	DESIGN UNITS	
MM ONLY	NTS	METRIC	THIRD ANGLE PROJECTION

	DATE
DRAWN BY: JAMES	1998/01/08
CHECKED BY: LCHANG	1999/04/23
APPROVED BY: SQUEK	1999/04/26

TITLE: MGRID, TOP ENTRY RECEPT. 4.50MM HT., SMT

molex MOLEX INCORPORATED

MATERIAL NO.: SEE TABLE

DOCUMENT NO.: SD-87381-**6*

SHEET NO.: 4 OF 4

SIZE: A3

THIS DRAWING CONTAINS INFORMATION THAT IS PROPRIETARY TO MOLEX INCORPORATED AND SHOULD NOT BE USED WITHOUT WRITTEN PERMISSION

tb_frame_A3_P_AM_T
Rev. F 2009/06/18