Excellent Integrated System Limited

Stocking Distributor

Click to view price, real time Inventory, Delivery & Lifecycle Information:

Molex Connector Corporation
0945509004

For any questions, you can email us directly:
sales@integrated-circuit.com

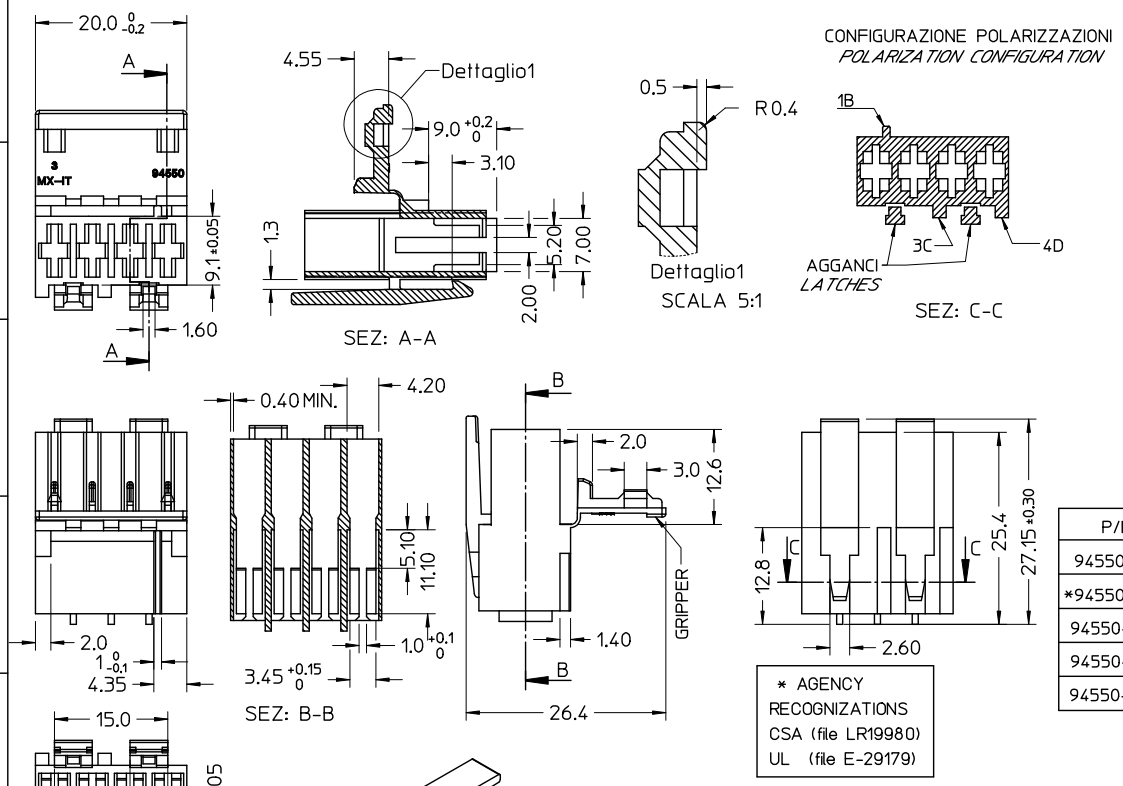

NOTE:
- USATO CON TERMINALE 94518-0XXX E 94549-0XXX
- SPECIFICA DI RIFERIMENTO PER IL CONNETTORE PS-94550-001
- SPESSORE MINIMO PARETI CONNETTORE 0.40 mm.

NOTE:
- *USED WITH TERMINALS 94518-0XXX AND 94549-0XXX*
- *REFER TO PS-94550-001 FOR CONNECTOR SPECIFICATION*
- *MINIMUM CONNECTOR WALL THICKNESS 0.40 mm.*

PACKAGING (SPQ): 1800 pcs in carton box
CONFEZIONE (SPQ): Box da 1800 Pz.

P/N	MATERIAL / COLOUR
94550-8004	NYLON 6.6 V2 NATURAL
*94550-9004	NYLON 6.6 V0 NATURAL GWT 550°C
94550-4004	NYLON 6.6 GWT 750°C sec.IEC 60335-1 TEST METHOD IEC 60695-2-11 NATURAL
94550-4084	NYLON 6.6 GWT 750°C sec.IEC 60335-1 TEST METHOD IEC 60695-2-11 BLACK
94550-3084	NYLON 6.6 BLACK NO-FLAME HOT WIRE IGNITION TEST

* AGENCY RECOGNIZATIONS
CSA (file LR19980)
UL (file E-29179)

Std. Descr: "HSG W/SEC LOCK AND LATCH 4CKT _____ COLOUR"

EC NO: Z2011-0087
DRWN:LSANTESS 2010/11/12
CHKD:LSANTESS2013/10/29
APPR:FBISELLO 2013/10/29
DESCRIPTION
REV
A4

QUALITY SYMBOLS
▼ - 0
▽ - 0

GENERAL TOLERANCES (UNLESS SPECIFIED)

	mm	INCH
4 PLACES	± ---	± ---
3 PLACES	± ---	± ---
2 PLACES	± 0.10	± ---
1 PLACE	± 0.2	± ---
ANGULAR ± 2 °		

DRAFT WHERE APPLICABLE
MUST REMAIN WITHIN DIMENSIONS

SCALE 2:1
DESIGN UNITS METRIC
FIRST ANGLE PROJECTION
REVISE ON CAD ONLY
DIMENSION STYLE MM ONLY
DRAWN BY FGOTTARD DATE 2002/06/27
CHECKED BY MTESTAGU DATE 2002/06/27
APPROVED BY GZUIN DATE 2002/06/27
TITLE HSG 4 CKT WITH SEC.LOCK AND EXTERNAL LATCH
MOLEX INCORPORATED
MATERIAL NO. SEE TABLE
DOCUMENT NO. SD-94550-003
SHEET NO. 1 OF 1
A3

THIS DRAWING CONTAINS INFORMATION THAT IS PROPRIETARY TO MOLEX INCORPORATED AND SHOULD NOT BE USED WITHOUT WRITTEN PERMISSION

tb_frame_A3_P_AM
rev. B1 2000/08/01