Excellent Integrated System Limited

Stocking Distributor

Click to view price, real time Inventory, Delivery & Lifecycle Information:

Panduit
PMNF1-3F-3K

For any questions, you can email us directly:
sales@integrated-circuit.com

Distributor of Panduit: Excellent Integrated System Limited
Datasheet of PMNF1-3F-3K - TERM FORK INS
Contact us: sales@integrated-circuit.com Website: www.integrated-circuit.com

THIS COPY IS PROVIDED ON A RESTRICTED BASIS AND IS NOT TO BE USED IN ANY WAY DETRIMENTAL TO THE INTERESTS OF PANDUIT CORP.

PART NUMBER	STUD SIZE	WIRE RANGE mm² (AWG)	DIMENSIONS mm				
			A ± ,80 (.03)	W ± ,25 (.01)	C ± ,38 (.01)	M ± ,50 (.02)	H ± ,50 (.02)
PMNF1-3F-3K	M3	0,5-1,5 (22-18)	20,0 (.79)	5,9 (.23)	5,0 (.20)	16,5 (.65)	3,3 (.13)
PMNF1-4F-3K	M4	0,5-1,5 (22-18)	21,6 (.85)	8,2 (.32)	5,8 (.23)	17,3 (.68)	4,3 (.17)
PMNF1-5F-3K	M5	0,5-1,5 (22-18)	21,8 (.86)	8,9 (.35)	6,3 (.25)	17,8 (.70)	5,0 (.20)
PMNF1-6F-3K	M6	0,5-1,5 (22-18)	26,4 (1.04)	11,2 (.44)	8,4 (.33)	20,1 (.79)	6,9 (.27)

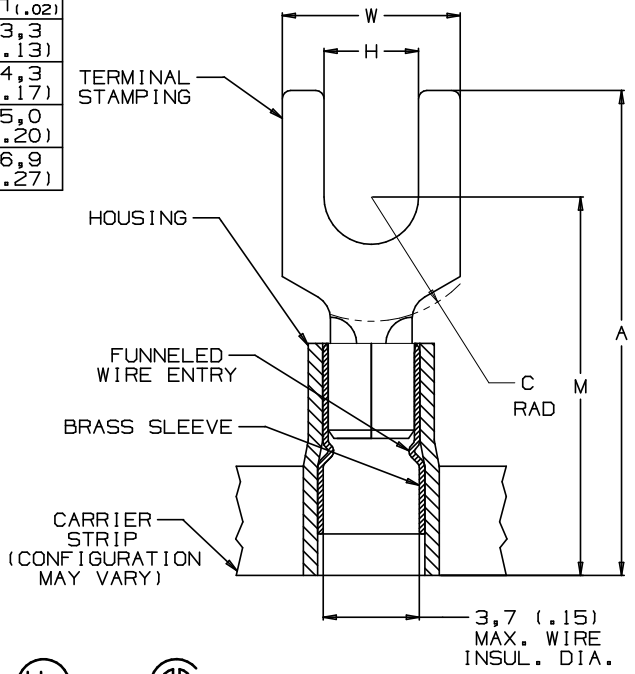

NOTES:

1. USED FOR:
   A. 600V MAX. BUILDING WIRE
      1000V MAX. IN SIGNS FIXTURES, AND LUMINAIRES
   B. 105°C (221°F) MAX. TEMP. RATING OF INSUL MAT'L
   C. SOLID OR STRANDED COPPER WIRE
2. PACKAGE QTY:
   3K = 3000 PCS. ON CONTINUOUSLY MOLDED CARRIER STRIP
3. MATERIAL:
   A. STAMPING: ,81 (.03)THK. COPPER, TIN PLATED
   B. SLEEVE: BRASS, TIN PLATED
   C. HOUSING: TYPE 6/6 NYLON, RED
4. WIRE STRIP LENGTH: $6{,}4^{+,8}_{-0}$ ($1/4^{+1/32}_{-0}$)
5. DIMENSIONS IN BRACKETS ARE IN INCHES OR AWG
6. UL LISTED AND CSA CERTIFIED WITH COPPER 22-18AWG WIRE ONLY

		PANDUIT PRESS					
		CP-851 DISCONTINUED	CP-860 DISCONTINUED	CP-861	CP-862	CP-871 60HZ	CP-871/E 50HZ
APPLICATORS	CA-800		X	X			
	CA-800EZ	X				X	X
	CA9				X	X	X

LISTED 587H E52164

CERTIFIED LR31212

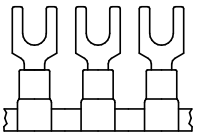

A41604_01

REV	DATE	BY	CHK	DESCRIPTION	ECN #	CUST	PM
01	3/06	DAW	DAW	ADDED PANDUIT PRESS & APPLICATOR CHART	TR00083		
00	9/97	JKD	WJB	RELEASED	6191	LCA	DBH

PANDUIT CORP. TINLEY PARK, ILLINOIS

0,5-1,5 mm² METRIC CONTINUOUSLY MOLDED, NYLON INSULATED, FUNNEL ENTRY FORK TERMINAL

DRAWN BY	CHK'D	SCALE	DRAWING NO.
TSMA		NONE	A41604