Excellent Integrated System Limited

Stocking Distributor

Click to view price, real time Inventory, Delivery & Lifecycle Information:

Panduit
FRIVRA4X4BL

For any questions, you can email us directly:
sales@integrated-circuit.com

Distributor of Panduit: Excellent Integrated System Limited
Datasheet of FRIVRA4X4BL - CABLE DUCT VERT COVER
Contact us: sales@integrated-circuit.com Website: www.integrated-circuit.com

THIS COPY IS PROVIDED ON A RESTRICTED BASIS AND IS NOT TO BE USED IN ANY WAY DETRIMENTAL TO THE INTERESTS OF PANDUIT CORP.

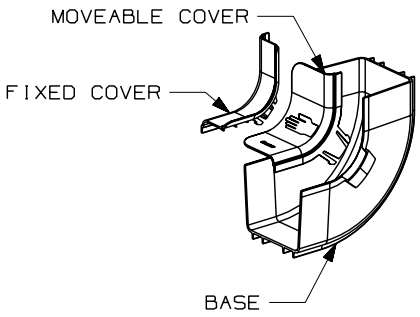

PANDUIT PART NUMBER	WEIGHT
FRIVRA4X4	1.09 LB/EACH 494g/EACH

B

C NOTES:

1. SEE CURRENT CATALOG FOR ADDITIONAL PART SUFFIXES TO INDICATE COLOR AND/OR PACKAGE QUANTITY.
2. THE FIBERRUNNER 4x4 INSIDE VERTICAL RIGHT ANGLE FITTING IS DESIGNED WITH A MINIMUM 2" (50.8) BEND RADIUS TO PROTECT FIBER OPTIC CABLES.
3. THE FIBERRUNNER 4x4 INSIDE VERTICAL RIGHT ANGLE FITTING INCLUDES:
   ONE (1) INSIDE VERTICAL RIGHT ANGLE BASE,
   ONE (1) FIXED COVER SECTION,
   ONE (1) MOVEABLE COVER SECTION
4. DIMENSIONS IN PARENTHESES ARE IN METRIC.

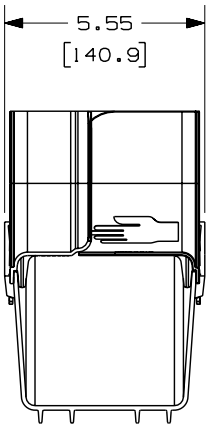

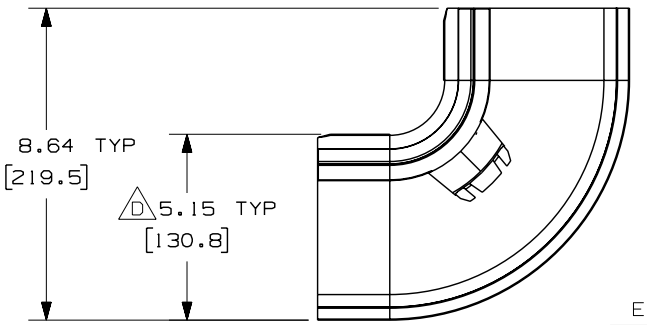

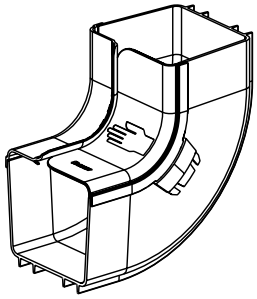

ENG. REF.: D38778BJ_DC_FRIVRA4X4_01.prt

CAD FILENAME/LAYERS: FRIVRA4X4.pdf

PANDUIT CORP TINLEY PARK, ILLINOIS

FIBERRUNNER 4x4 INSIDE VERTICAL RIGHT ANGLE FITTING (FRIVRA4X4)
A CUSTOMER DRAWING

UNLESS OTHERWISE SPECIFIED, DIMENSIONAL TOLERANCES ARE:
(.X) ± (.XX) ± .03 (.8) (.XXX) ± ANGLES ±

UNLESS OTHERWISE SPECIFIED, ALL DIMENSIONS ARE GIVEN IN INCHES, THIRD ANGLE PROJECTION.

REV	DATE	BY	CHK	DESCRIPTION	ECN	-	R	CUST	SUP	GMBH
-	--------	---	--	D. ADDED DIMENSION C. REVISED GENERAL NOTES	--------	--	--			
1	7-6-06	DTP	RN	B. REVISED PART WEIGHT A. REVISED DRAWING TITLE	38778-10	RN	RN			
R	8-17-04	MSO	SMF	RELEASED TO PRODUCTION	38778-10	RN	RN			

DRAWN BY: MSO
DATE: 8-17-04
CHK'D: SMF
MAT'L: ABS
SCALE: NONE
DRAWING NO.: 38778-10
DWG SIZE: A