Excellent Integrated System Limited

Stocking Distributor

Click to view price, real time Inventory, Delivery & Lifecycle Information:

Advanced Photonix, Inc.
PDI-C114-F

For any questions, you can email us directly:
sales@integrated-circuit.com

PHOTONIC DETECTORS INC.

Silicon Photodiode, Near I.R. Photoconductive
Type PDI-C114-F

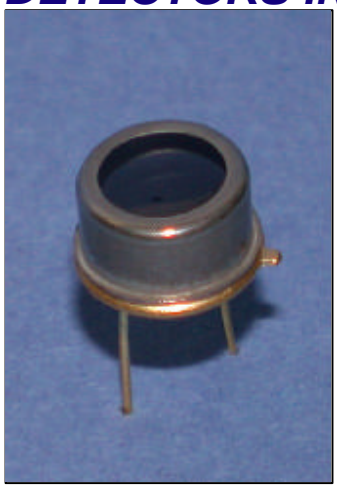

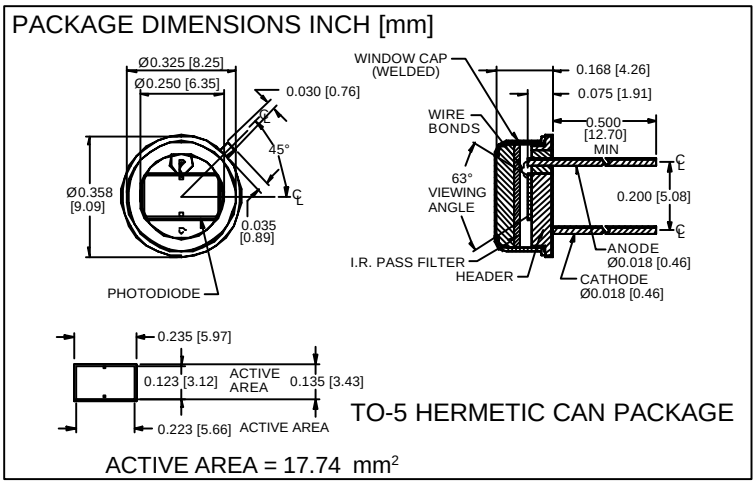

FEATURES

- High speed
- I.R. pass visible rejection
- Match to I.R. emitters
- Hermetic package

DESCRIPTION

The **PDI-C114-F** is a silicon, PIN planar diffused photodiode with NIR pass, visible light rejection optical filter. Ideal for high speed, low capacitance, photoconductive NIR applications. Packaged in a hermetic TO-5 metal can with a flat window cap.

APPLICATIONS

- I.R. detector
- I.R. laser detector
- Photo-interrupters
- Industrial controls

ABSOLUTE MAXIMUM RATING (TA=25°C unless otherwise noted)

SYMBOL	PARAMETER	MIN	MAX	UNITS
V_{BR}	Reverse Voltage		100	V
T_{STG}	Storage Temperature	-55	+100	°C
T_O	Operating Temperature Range	-40	+80	°C
T_S	Soldering Temperature*		+240	°C
I_L	Light Current		0.5	mA

*1/16 inch from case for 3 secs max

SPECTRAL RESPONSE

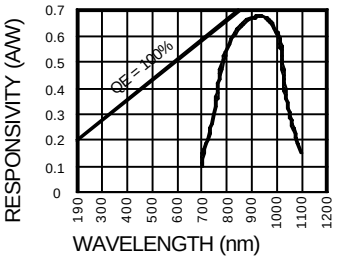

ELECTRO-OPTICAL CHARACTERISTICS (TA=25°C unless otherwise noted)

SYMBOL	CHARACTERISTIC	TEST CONDITIONS	MIN	TYP	MAX	UNITS
I_{SC}	Short Circuit Current	H = 100 fc, 2850 K	171	212		mA
I_D	Dark Current	H = 0, V_R = 10 V		3	8.0	nA
R_{SH}	Shunt Resistance	H = 0, V_R = 10 mV	150	500		MΩ
TC R_{SH}	RSH Temp. Coefficient	H = 0, V_R = 10 mV		-8		% / °C
C_J	Junction Capacitance	H = 0, V_R = 10 V**		50		pF
λrange	Spectral Application Range	Spot Scan	700		1100	nm
λp	Spectral Response - Peak	Spot Scan		950		nm
V_{BR}	Breakdown Voltage	I = 10 mA	100	125		V
N EP	Noise Equivalent Power	V_R = 10 V @ Peak		5.0×10^{-14}		W/ $\sqrt{Hz}$
tr	Response Time	RL = 1 KΩ V_R = 50 V		20		nS

Information in this technical data sheet is believed to be correct and reliable. However, no responsibility is assumed for possible inaccuracies or omission. Specifications are subject to change without notice. ** f = 1 MHz