# Excellent Integrated System Limited

Stocking Distributor

Click to view price, real time Inventory, Delivery & Lifecycle Information:

Molex Connector Corporation
1720420403

For any questions, you can email us directly:
sales@integrated-circuit.com

Distributor of Molex Connector Corporation: Excellent Integrated System Limited
Datasheet of 1720420403 - CONN HDR 4POS 7.50MM PCB SLDR
Contact us: sales@integrated-circuit.com Website: www.integrated-circuit.com

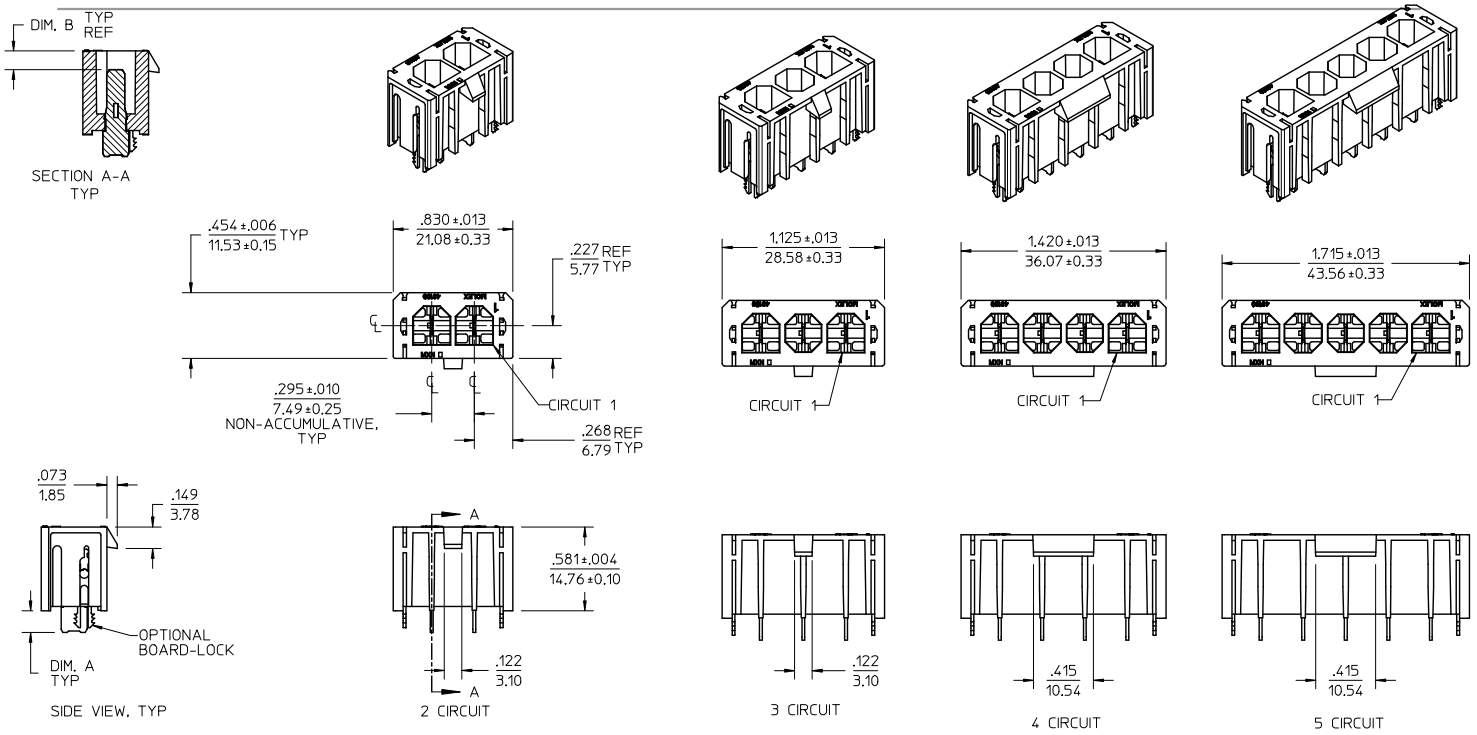


NOTES:
1. MATERIALS
   HOUSING: GLASS-FILLED, LIQUID CRYSTAL POLYMER (LCP), UL94V-0, LOW-HALOGEN, GLOW-WIRE CAPABLE, COLOR: BLACK
   TERMINALS: ETP COPPER
2. FINISHES:
   .000100/.00254 MIN SELECT SILVER AND .000100/.00254 MIN SELECT MATTE TIN OVER NICKEL OVERALL
3. PRODUCT SPECIFICATION:
   PS-171825-001
4. PACKAGING INFORMATION:
   PK-43789-001 (TRAY PACK)
5. MATES WITH:
   171825 FEMALE CRIMP TERMINALS
   172672 RECEPTACLE HOUSINGS
6. THIS PART CONFORMS TO CLASS B REQUIREMENTS OF COSMETIC SPEC PS-45499-002.
7. HEADERS INDICATED AS "FINGER-PROOF" ARE DESIGNED TO MINIMIZE ACCESSIBILITY TO LIVE PARTS, PER UL 1977 AND UL 60950 FINGER PROBE REQUIREMENTS.
8. SLOTTED VIAS, PLATED-THRU, MOLEX RECOMMENDS ANNULAR RING DESIGN PARAMETERS AS SPECIFIED IN IPC-2221, GENERIC STANDARD ON PRINTED BOARD DESIGN.
9. 118/3.00 MOUNTING-HOLES (NON-PLATED) FOR OPTIONAL BOARD-LOCKS SHOWN.

| | | |
|---|---|---|
| SECTION A-A | EC NO: UCP2016-0143 | 2015/07/10 |
| | DRWN: MONTI | 2015/07/14 |
| | CHKD: BANDERSON | 2015/07/23 |
| | APPR: FSMITH | |
| DESCRIPTION | | |
| REV | B3 | |

QUALITY SYMBOLS

GENERAL TOLERANCES (UNLESS SPECIFIED)

| | mm | INCH |
|---|---|---|
| 4 PLACES | ± --- | ± --- |
| 3 PLACES | ± --- | ± .005 |
| 2 PLACES | ± 0.13 | ± .010 |
| 1 PLACE | ± 0.25 | ± --- |
| 0 PLACE | ± --- | ± --- |
| ANGULAR ±1/2° | | |

DRAFT WHERE APPLICABLE MUST REMAIN WITHIN DIMENSIONS

| | | | |
|---|---|---|---|
| DIMENSION STYLE: IN/MM | SCALE: 2:1 | DESIGN UNITS: INCH | THIRD ANGLE PROJECTION |
| DRAWN BY: BANDERSON | DATE: 2013/06/21 | TITLE: SUPER-SABRE VERTICAL HEADER ASSY SINGLE-ROW | |
| CHECKED BY | DATE | | |
| APPROVED BY: FSMITH | DATE: 2013/12/06 | molex | |
| MATERIAL NO.: SEE CHART | | DOCUMENT NO.: SD-172042-001 | SHEET NO.: 1 OF 2 |
| SIZE: C | THIS DRAWING CONTAINS INFORMATION THAT IS PROPRIETARY TO MOLEX INCORPORATED AND SHOULD NOT BE USED WITHOUT WRITTEN PERMISSION | | |

tb_frame_C_P_AM_T Rev. G 2012/01/11

Distributor of Molex Connector Corporation: Excellent Integrated System Limited
Datasheet of 1720420403 - CONN HDR 4POS 7.50MM PCB SLDR
Contact us: sales@integrated-circuit.com Website: www.integrated-circuit.com

| MATERIAL NUMBER* | CIRCUIT SIZE | SOLDER-TAIL | FINGER PROOF 7 | BOARD-LOCK |
|---|---|---|---|---|
| 1720420201 | 2 | SHORT | YES | NO |
| 1720420202 | 2 | SHORT | YES | YES |
| 1720420203 | 2 | SHORT | NO | NO |
| 1720420204 | 2 | SHORT | NO | YES |
| 1720420205 | 2 | LONG | YES | NO |
| 1720420206 | 2 | LONG | YES | YES |
| 1720420207 | 2 | LONG | NO | NO |
| 1720420208 | 2 | LONG | NO | YES |
| 1720420301 | 3 | SHORT | YES | NO |
| 1720420302 | 3 | SHORT | YES | YES |
| 1720420303 | 3 | SHORT | NO | NO |
| 1720420304 | 3 | SHORT | NO | YES |
| 1720420305 | 3 | LONG | YES | NO |
| 1720420306 | 3 | LONG | YES | YES |
| 1720420307 | 3 | LONG | NO | NO |
| 1720420308 | 3 | LONG | NO | YES |
| 1720420401 | 4 | SHORT | YES | NO |
| 1720420402 | 4 | SHORT | YES | YES |
| 1720420403 | 4 | SHORT | NO | NO |
| 1720420404 | 4 | SHORT | NO | YES |
| 1720420405 | 4 | LONG | YES | NO |
| 1720420406 | 4 | LONG | YES | YES |
| 1720420407 | 4 | LONG | NO | NO |
| 1720420408 | 4 | LONG | NO | YES |
| 1720420501 | 5 | SHORT | YES | NO |
| 1720420502 | 5 | SHORT | YES | YES |
| 1720420503 | 5 | SHORT | NO | NO |
| 1720420504 | 5 | SHORT | NO | YES |
| 1720420505 | 5 | LONG | YES | NO |
| 1720420506 | 5 | LONG | YES | YES |
| 1720420507 | 5 | LONG | NO | NO |
| 1720420508 | 5 | LONG | NO | YES |
| 1720420601 | 6 | SHORT | YES | NO |
| 1720420602 | 6 | SHORT | YES | YES |
| 1720420603 | 6 | SHORT | NO | NO |
| 1720420604 | 6 | SHORT | NO | YES |
| 1720420605 | 6 | LONG | YES | NO |
| 1720420606 | 6 | LONG | YES | YES |
| 1720420607 | 6 | LONG | NO | NO |
| 1720420608 | 6 | LONG | NO | YES |
| 1720420801 | 8 | SHORT | YES | NO |
| 1720420802 | 8 | SHORT | YES | YES |
| 1720420803 | 8 | SHORT | NO | NO |
| 1720420804 | 8 | SHORT | NO | YES |
| 1720420805 | 8 | LONG | YES | NO |
| 1720420806 | 8 | LONG | YES | YES |
| 1720420807 | 8 | LONG | NO | NO |
| 1720420808 | 8 | LONG | NO | YES |

| SOLDER-TAIL | DIM. "A" ±.020/0.51 |
|---|---|
| SHORT | .150/3.81 |
| LONG | .210/5.33 |

| FINGER-PROOF | DIM. "B" (REF) |
|---|---|
| YES | .129/3.26 |
| NO | .083/2.10 |

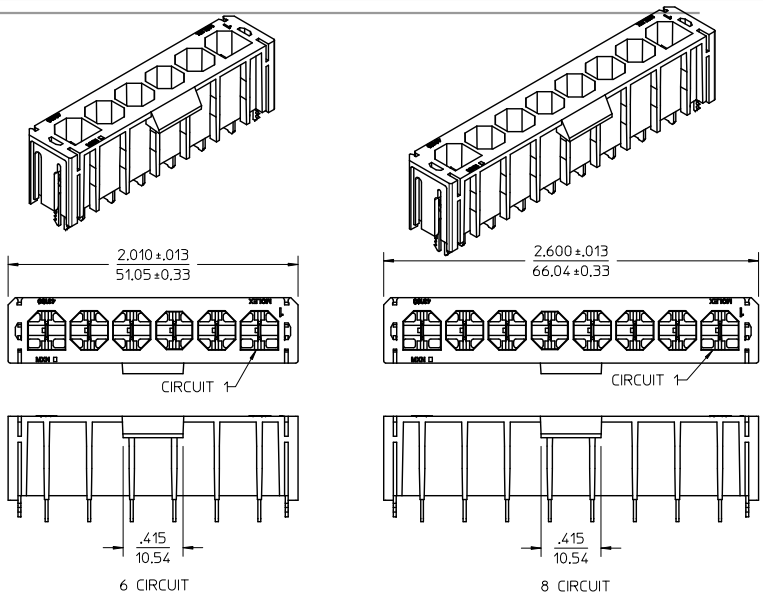


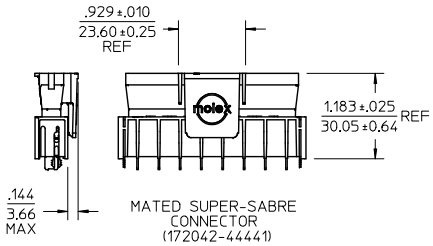


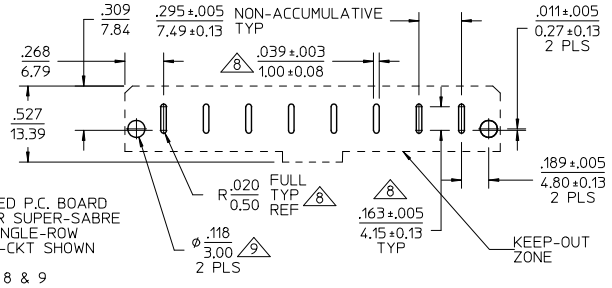


RECOMMENDED P.C. BOARD LAYOUT FOR SUPER-SABRE VERTICAL SINGLE-ROW HEADERS, 8-CKT SHOWN

SEE NOTES 8 & 9

SEE SHEET 1
EC NO: UCP2016-0143 2015/07/10
DRWN: MONT 1 2015/07/14
CHKD: BANDERSON 2015/07/23
APPR: FSMITH
DESCRIPTION
REV
B3

QUALITY SYMBOLS
5 = 0
6 = 0
7 = 0

GENERAL TOLERANCES (UNLESS SPECIFIED)

| | mm | INCH |
|---|---|---|
| 4 PLACES | ± --- | ± --- |
| 3 PLACES | ± --- | ± .005 |
| 2 PLACES | ± 0.13 | ± .010 |
| 1 PLACE | ± 0.25 | ± --- |
| 0 PLACE | ± --- | ± --- |

ANGULAR ±1/2°

DRAFT WHERE APPLICABLE MUST REMAIN WITHIN DIMENSIONS

DIMENSION STYLE: IN/MM
SCALE: 2:1
DESIGN UNITS: INCH
THIRD ANGLE PROJECTION

DRAWN BY: BANDERSON DATE: 2013/06/21
CHECKED BY DATE
APPROVED BY: FSMITH DATE: 2013/12/06

TITLE: SUPER-SABRE VERTICAL HEADER ASSY SINGLE-ROW

molex

MATERIAL NO.: SEE CHART
DOCUMENT NO.: SD-172042-001
SHEET NO.: 2 OF 2
SIZE: C

THIS DRAWING CONTAINS INFORMATION THAT IS PROPRIETARY TO MOLEX INCORPORATED AND SHOULD NOT BE USED WITHOUT WRITTEN PERMISSION

tb_frame_C_P_AM_T
Rev. G 2012/01/11