Excellent Integrated System Limited

Stocking Distributor

Click to view price, real time Inventory, Delivery & Lifecycle Information:

Amphenol Commercial Products
L177DA15SF179

For any questions, you can email us directly:
sales@integrated-circuit.com

D-SUBMINIATURE CONNECTORS

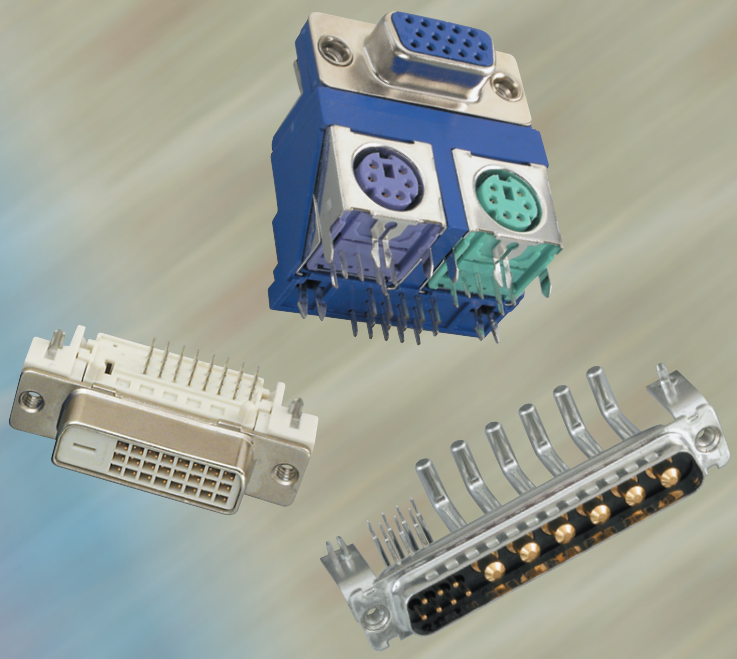

Amphenol®

ACCESSORIES | STANDARD DENSITY | SURFACE MOUNT RECEPTACLES | HIGH DENSITY

GENERAL DESCRIPTION:

Amphenol's line of D-Subminiature rack and panel connectors is part of an industry standard for applications requiring reliable, rugged, connectors. These connectors are designed to accommodate rack and panel, cable to panel and cable to cable applications. D-Subminiature connectors are pin and socket devices that employ contacts encased in a molded dielectric insert surrounded by a "D" shaped shell for polarization.

MARKETS:

Amphenol D-Subminiature connectors can be used in commercial, industrial or military markets. We offer a broad selection of dielectric materials and contact styles and configurations to meet all of your design requirements.

APPLICATIONS INCLUDE:

- Business equipment
- Electronic office systems
- Data communications
- Medical equipment
- Mobile communications
- Consumer electronics

AMPHENOL D-SUB FEATURES:

- Industry standard interfacing RS232 and RS449 mating configurations per EIA standards.
- UL Component Recognition File number E64911 (617, 841, 17, 17D, 17HD, ED, 17RR, 17SD, 117DF, 17BH, 17TW
- Variations available:
  Solder cup
  Straight pc mount solder
  Right angle pc mount solder
  Solderless wire wrap
  Crimp
  High Density Right Angle
  High Density Straight
  Stacked Right Angle PC mount
  Surface mount
- Five shell sizes offer widest choice of contact positions: 9, 15, 25, 37 and 50 in standard density and 15, 26, 44, 62 and 78 positions in high-density.
- Inserts are flame-retardant thermoplastic.
- Accessories for all applications are available including strain reliefs, cable clamps, shielded backshells, mating hardware and connector to pc board mounting hardware.
- Automatic and manual tooling is available for both crimp and IDC versions.
- Contact Amphenol for lease information.

Dimensions and characteristics are subject to change without notice.

AMPHENOL D-SUBMINIATURE

High Density

17E BH/HD Series

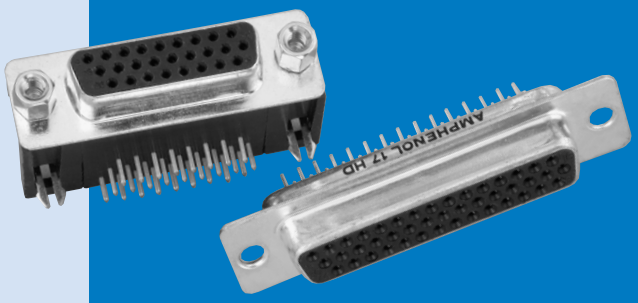

Specifications:

Materials and Platings

Shells	Steel, tin plated, grounding indents on plug.
Contact Material	Copper alloy
Contact Plating	Engagement area: gold (see ordering information).
Termination End	150µ" (3.81µm) tin/lead
Nickel Underplate	50µ" (1.27µm) entire contact

Electrical Data

Current Rating	3 Amps maximum per contact
Voltage Rating	125 VAC
Dielectric Withstanding Voltage	1000 VAC (minimum)
Dielectric	Glass filled thermoplastic, black, UL 94 VO
Insulation Resistance	5,000 Megaohms (minimum)
Contact Resistance	15 Milliohms (maximum)

Climatic Data

Operating Temperature	-67°F (-55°C) to 221°F (105°C)

Amphenol's High Density D-Subminiature connectors compleme nt Amphenol's extensive D-Subminiature connector line. This line of connectors offers many superior features, high performance level and low installation cost.

The connector configurations are available in 15, 26, 44, 62 and 78 positions.

The product offering includes PCB mount connectors in both straight or right angle termination styles. Straight PCB mount are available in both Fixed Screw Machine and Stamped and Formed contacts, while Right Angle PCB mount are only available with Stamped and Formed contacts.

A cable mount version with solder terminations is also available, which can be combined with Amphenol's standard line of shielded or unshielded backshells.

- Industrial
- Telecom
- Any industry standard I / O connections

Inches (mm)

Telephone: (416) 754-5656 Fax: (416) 754-8668 E-Mail: sales@amphenolcanada.com

17E BH/HD Series

High Density / Right Angle, PC Mount
Front Metal Shell, .350 (8.89) Footprint / Fixed Contact

DIMENSIONS FOR 15 - 62 POSITION (3 ROW)(SHOWN WITH FIXED FEMALE SCREWLOCKS) DIMENSIONS FOR THE 78 POSITION (4 ROW)

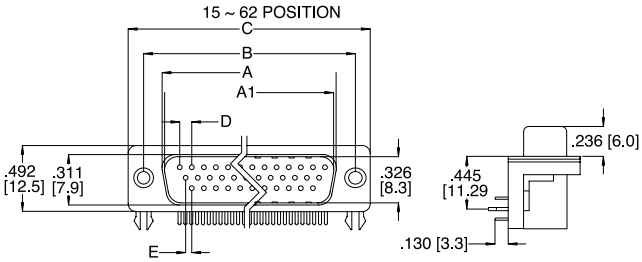

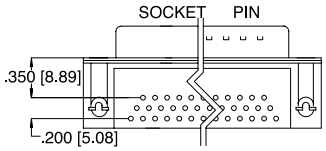

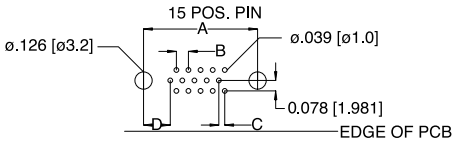

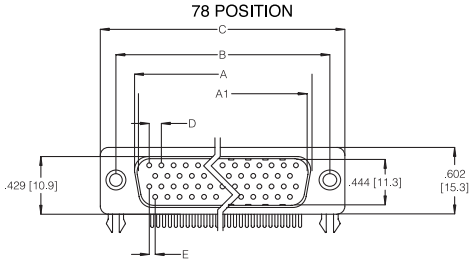

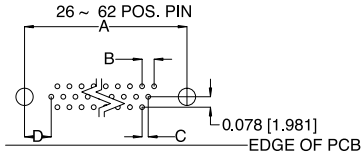

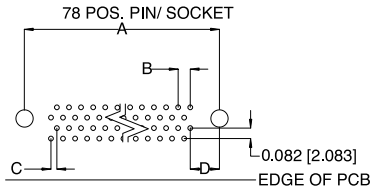

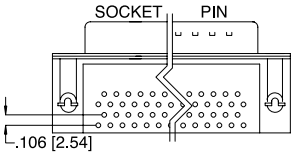

CONTACTS	A SOCKET	A1 PIN	B	C	D	E
15	.642 [16.30]	.666 [16.92]	.984 [25.0]	1.213 [30.8]	.090 [2.29]	.045 [1.145]
26	.969 [24.6]	.994 [25.25]	1.311 [33.3]	1.543 [39.2]	.090 [2.29]	.045 [1.145]
44	1.508 [38.3]	1.534 [38.96]	1.854 [47.1]	2.091 [53.1]	.090 [2.29]	.045 [1.145]
62	2.157 [54.8]	2.182 [55.42]	2.50 [63.5]	2.732 [69.4]	.095 [2.41]	.047 [1.205]
78	2.05 [52.20]	2.079 [52.81]	2.40 [61.0	2.638 [67.0]	.095 [2.41]	.047 [1.205]

CONTACTS	A	B	C	D
15	.984 [25.0]	.090 [2.29]	.045 [1.145]	.277 [7.04]
26	1.311 [33.3]	.090 [2.29]	.045 [1.145]	.271 [6.88]
44	1.854 [47.1]	.090 [2.29]	.045 [1.145]	.271 [6.88]
62	2.50 [63.5]	.095 [2.41]	.047 [1.205]	.275 [7.00]
78	2.402 [61.0]	.095 [2.41]	.047 [1.205]	.300 [7.63]

Ordering Information

17EBH Series High Density D-Sub

Front Metal Shell, Right-Angle PC Mount

17EBH 0XX X XX X XX

Series

Number Of Positions
15, 26, 44, 62, 78

Type
- **P** Pin (male)
- **S** Socket (female)

PCB Mount Options
- **00** Clear hole
- **10** Arrowhead Board

Panel Mounting Options
- **0** .120 (3.05) Clear Hole
- **1** #4-40 Threaded Hole
- **2** #4-40 Fixed Female Screw

Plating Code
- **AA** Gold Flash over Nickel
- **AM** 30µ"(.76µm) Gold over Nickel

Distributor of Amphenol Commercial Products: Excellent Integrated System Limited
Datasheet of L177DA15SF179 - D-Sub Connector Receptacle, Female Sockets 15 Position Through Hole Wire Wrap
Contact us: sales@integrated-circuit.com Website: www.integrated-circuit.com

High Density 17EHD Series
Solder Cup And Straight P.C. Mount / Double Metal Shell Fixed Contact

Dimensions

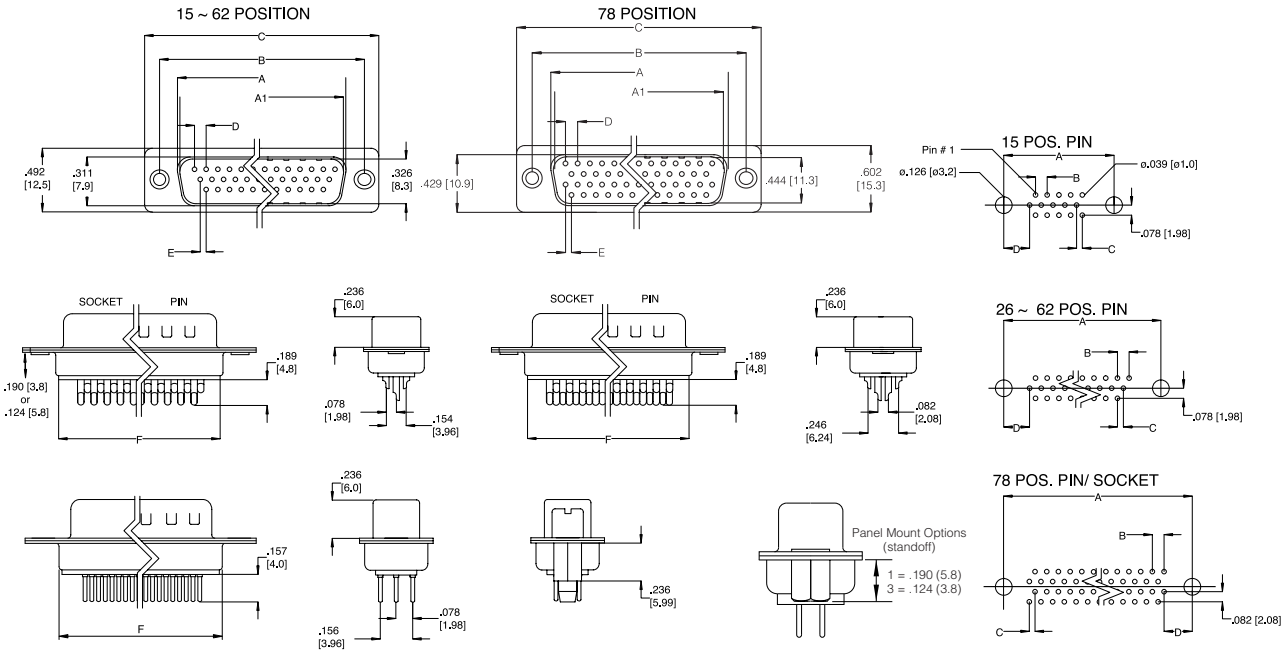

CONTACTS	A SOCKET	A1 PIN	B	C	D	E	F
15	.642 [16.30]	.666 [16.92]	.984 [25.0]	1.213 [30.8]	.090 [2.29]	.045 [1.145]	.756 [19.2]
26	.969 [24.6]	.994 [25.25]	1.311 [33.3]	1.543 [39.2]	.090 [2.29]	.045 [1.145]	1.071 [27.2]
44	1.508 [38.3]	1.534 [38.96]	1.854 [47.1]	2.091 [53.1]	.090 [2.29]	.045 [1.145]	1.618 [41.1]
62	2.157 [54.8]	2.182 [55.42]	2.50 [63.5]	2.732 [69.4]	.095 [2.41]	.047 [1.205]	2.256 [57.3]
78	2.05 [52.20]	2.079 [52.81]	2.40 [61.0	2.638 [67.0]	.095 [2.41]	.047 [1.205]	2.169 [55.1]

CONTACTS	A	B	C	D
15	.984 [25.0]	.090 [2.29]	.045 [1.145]	.277 [7.04]
26	1.311 [33.3]	.090 [2.29]	.045 [1.145]	.277 [7.04]
44	1.854 [47.1]	.090 [2.29]	.045 [1.145]	.277 [7.04]
62	2.50 [63.5]	.095 [2.41]	.047 [0.120]	.275 0.699
78	2.402 [61.0]	.095 [2.41]	.047 [0.120]	.275 0.699

Ordering Information

17E HD Series High Density D-Sub

Solder Cup & Straight P.C. Mount, Front Metal Shell Fixed Contact

17EHD 0XX X XX X XX

Series

Number Of Positions
15, 26, 44, 62 ,78

Type
- **P** Pin (male)
- **S** Socket (female)

Termination Types:
- **00** Solder Cup
- **30** Board-mount, Vertical
- **32** Board-mount, Vertical with Boardlocks
- **33** Board-mount, Vertical with standoff, no boardlock

Panel Mounting Options:
- **0** .120 (3.05) Clear Hole
- **1** #4-40 Threaded Hole .190 (5.8)
- **2** #4-40 Fixed Female Screwlock
- **3** #4-40 Threaded Hole .124 (3.8)

Plating Code:
- **AA** Gold Flash over Nickel
- **AM** 30µ"(.76µm) Gold over Nickel

INCHES (MM)

AMPHENOL D-SUBMINIATURE

Right-Angle Board Mount Connectors
Front Metal Shell

6E17 Series

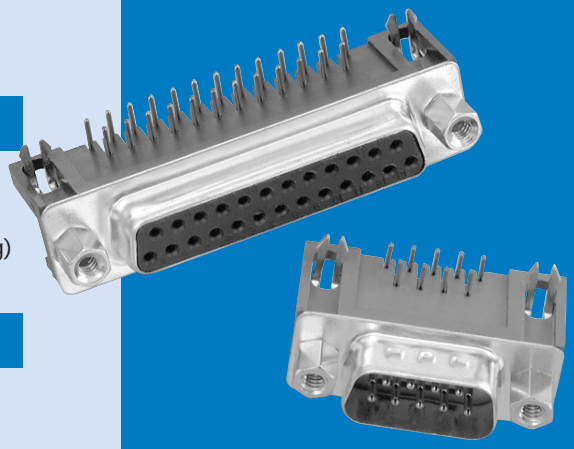

Specifications:

Materials and Platings

Shells	Steel, tin plated
Contacts	Precision formed copper alloy
Contact Plating	Gold over nickel
Contact Forces	Engagement: 12 oz. max. (340.2 g) Separation: .75 oz. min. (21.26 g)

Electrical Data

Current Rating	5 amps
Dielectric Withstanding Voltage	1000 VAC/60 sec.
Dielectric	Glass filled thermoplastic, black, UL 94 VO
Contact Resistance	15 milliohms max.

Climatic Data

Temperature Range	-67°F (-55°C) to 221°F (105°C)

Amphenol's 6E17 series of right angle commercial connectors provide high performance at competitive prices.

The front metal shell helps to provide reduced EMI/ RFI emissions, and the contacts are selectively plated to provide additional high performance. The 6E17 series are available in a variety of board mounting and grounding options including arrowhead boardlocks and #4-40 threaded inserts.

Front mounting holes are also available threaded, un-threaded and with installed female hex screwlocks.

- Industrial
- Telecom
- Any industry standard I / O connections

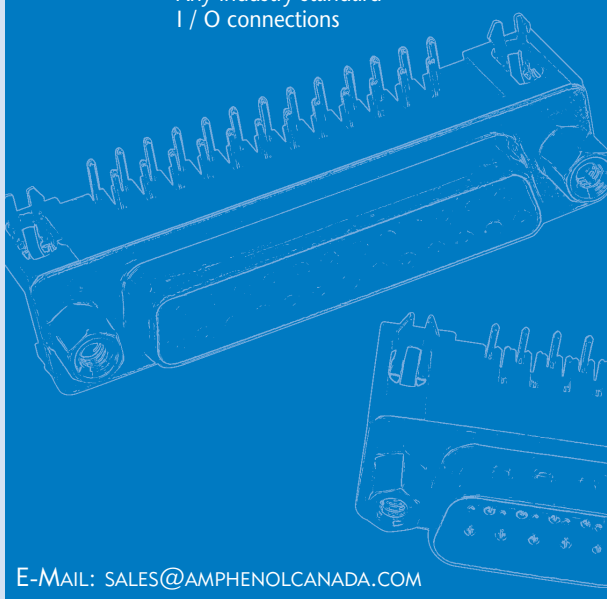

Inches (mm)

Telephone: (416) 754-5656 Fax: (416) 754-8668 E-Mail: sales@amphenolcanada.com

Dimensions

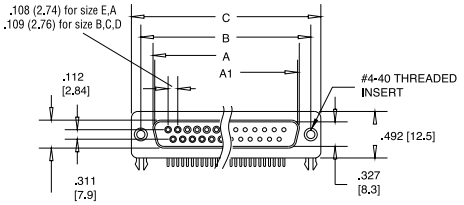

CONTACTS	A SOCKET	A1 PIN	B	C
9	.642 [16.30]	.666 [16.92]	.984 [25.0]	1.213 [30.8]
15	.969 [24.6]	.994 [25.25]	1.311 [33.3]	1.543 [39.2]
25	1.508 [38.3]	1.534 [38.96]	1.854 [47.1]	2.091 [53.1]
37	2.157 [54.8]	2.182 [55.42]	2.50 [63.5]	2.732 [69.4]

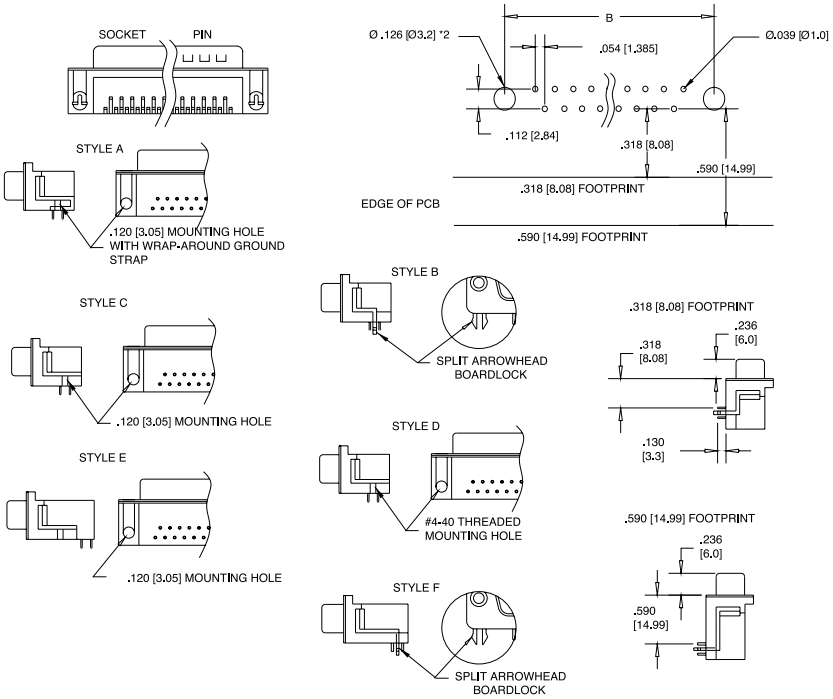

Ordering Information

6E17 X 0XX X XX X XX X

Series

Number of Contacts
09, 15, 25, 37

.318 (8.08) Footprint	.590 (14.99) Footprint	Description of PC Board Mounting Characteristics	Style
A		.120 (3.05) diameter mtg hole with wrap-around ground strap	A
C		spit arrowhead boardlock	B
D	U	.120 (3.05) diameter mtg hole	C&E
J		#4-40 threaded mtg hole	D
	Y	split arrowhead boardlock	F

Code **Contact Type**
P Pin (male)
S Socket (female)

Variation Code
E for U & Y Footprint

Contact **Housing Characteristics**
20 Tin plated receptacle
21 Tin plated plug with grounding indents

Code **Panel Mounting Options**
0 .120 (3.05) clear hole
1 #4-40 threaded hole
2 #4-40 threaded hole with female screwlock
4 Fixed female round screwlock

Code **Contact Plating**
BF Engagement area 3µ" (.076µm) gold flash, terminal end area 100µ"/200µ (2.54µm/5.08µm) tin/lead underplate of 50µ" (1.27µm) nickel
CF Engagement area 15µ" (.381µm) gold flash, terminal end area 100µ"/200µ (2.54µm/5.08µm) tin/lead underplate of 50µ" (1.27µm) nickel
AJ Engagement area 30µ" (.76µm) gold, terminal end area 100µ"/200µ (2.54µm/5.08µm) tin/lead underplate of 50µ" (1.27µm) nickel

For filtered version, see page 56.

Dual Port Connectors

6E17 H Series

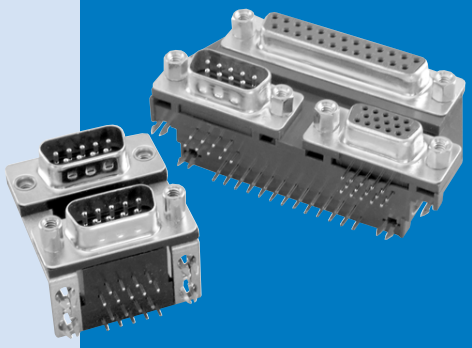

Specifications:

Materials and Platings

Shells	Steel, tin plated
Contacts	Precision formed copper alloy
Contact Plating	Gold over nickel
Contact Forces	Engagement: 12 oz. max. (340.2 g) Separation: .75 oz. min. (21.26 g)

Electrical Data

Current Rating	5 amps
Dielectric Withstanding Voltage	1000 VAC/60 sec.
Dielectric	Glass filled thermoplastic, black, UL 94 VO
Contact Resistance	15 milliohms max.

Climatic Data

Temperature Range	-67°F (-55°C) to 221°F (105°C)

Amphenol's 61E7 series dual port connectors are a state of the art design. The front metal shell helps reduce EMI/RFI emissions.

Contacts are selectively plated for high performance at a low cost.

Designed to save PC board space, Amphenol's dual port "D" provides two input output connectors in a minimal amount of board space.

These connectors are available with various stacking options: same gender, mixed gender and multiple pin counts.

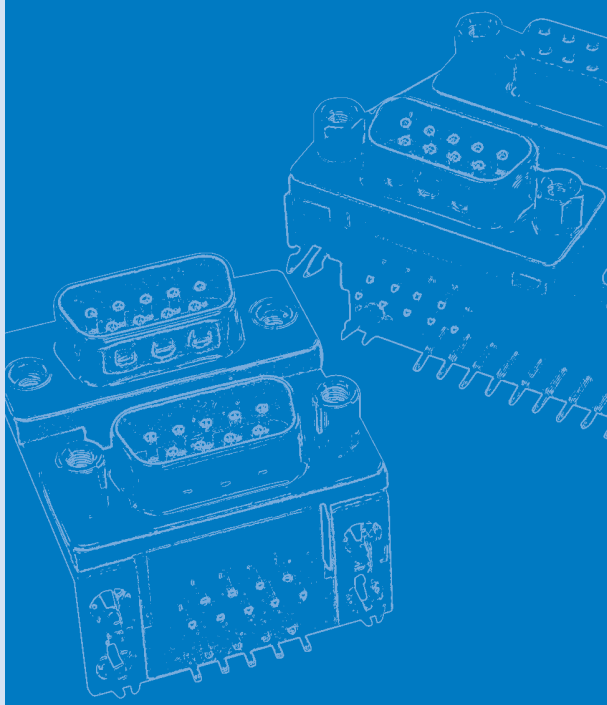

Inches (mm)

Telephone: (416) 754-5656 Fax: (416) 754-8668 E-Mail: sales@amphenolcanada.com

Dimensions

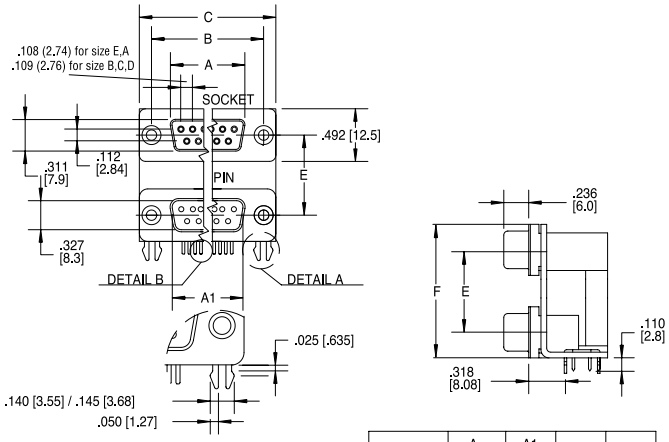

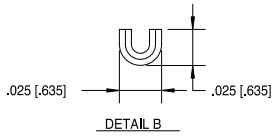

Contact Tail Cross Section

CONTACTS	A SOCKET	A1 PIN	B	C
9	.642 [16.30]	.666 [16.92]	.984 [25.0]	1.213 [30.8]
15	.969 [24.6]	.994 [25.25]	1.311 [33.3]	1.543 [39.2]
25	1.508 [38.3]	1.534 [38.96]	1.854 [47.1]	2.091 [53.1]
37	2.157 [54.8]	2.182 [55.42]	2.50 [63.5]	2.732 [69.4]

Code Letter	Product Description		Dimensions	
	Top Connector	Bottom Connector	E	F
A	Pin	Pin	0.900 ± 0.010 (22.86 ± 0.25)	1.415 (35.94)
B	Socket	Socket		
C	Pin	Socket		
D	Socket	Pin		
E	Pin	Pin	0.750 ± 0.010 (19.05 ± 0.25)	1.265 (32.13)
F	Socket	Socket		
G	Pin	Socket		
H	Socket	Pin		
J	Pin	Pin	0.625 ± 0.010 (15.88 ± 0.25)	1.140 (28.96)
K	Socket	Socket		
L	Pin	Socket		
M	Socket	Pin		

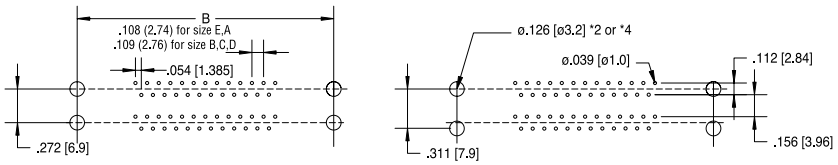

PCB EDGE

Ordering Information

6E17H X XX X XX X XX X

Series
6E17H Dual port; right angle solder tail

Code — Boardlock
C Boardlock option
O No PC boardlock

Code — Number of Contacts

18	2 x 9	15	15 over blank
30	2 x 15	34	9 / 25
50	2 x 25	43	25 / 9+9
74	2 x 37	H15A	VGA / Triple Audio
40	15 / 25		

Consult factory for other available configurations

58.064 (22.86) Spacing	48.388 (19.05) Spacing	40.31 (15.87) Spacing	Product Description	
			Top Connector	Bottom Connector
A	E	J	Pin	Pin
B	F	K	Socket	Socket
C	G	L	Pin	Socket
D	H	M	Socket	Pin

For filtered version, see page 55.

Variation Code
L for .311 (7.89) Footprint

Code — Housing Characteristics
00 Steel shell, tin plated receptacles without grounding dimples (options B, F, K)
01 Steel shells, tin plated plugs with grounding dimples (options A, E, J)
03 Steel shells, tin plated, plug shell with grounding dimples and receptacle shell without dimples (options C,G,L,D,H,M)

Code — Panel Mounting Options
0 120" clear hole
1 #4-40 threaded hole
2 #4-40 threaded hole with female screwlock

Code — Contact Plating
BF Engagement area 3µ" (.076µm) gold flash, terminal end area 100µ"/200µ" tin/lead, (2.54µm/5.08µm) tin/lead underplate of 50µ" (1.27µm) nickel
CF Engagement area 15µ" (.381µm) gold flash, terminal end area 100µ"/200µ" (2.54µm/5.08µm) tin/lead underplate of 50µ" (1.27µm) nickel
AJ Engagement area 30µ" (.76µm) gold, terminal end area 100µ"/200µ (2.54µm/5.08µm) tin/lead underplate of 50µ" (1.27µm) nickel

AMPHENOL D-SUBMINIATURE

High Temperature
Straight Board Mount Connectors

Specifications:

Materials and Platings

Shells	Steel/nickel plated
Contacts	Precision formed copper alloy
Contact Plating	Gold over nickel

Electrical Data

Current Rating	5 amps
Voltage Rating	600 V
Dielectric	Glass filled thermoplastic, black, UL 94 VO
Contact Resistance	10 milliohms (max.)

Climatic Data

Temperature Range	Environmental: -67°F (-55°C) to 302°F (150°C)
Process Compatibility	IR-Air Convection 500°F (260°C) for 20 seconds

6E17S Series

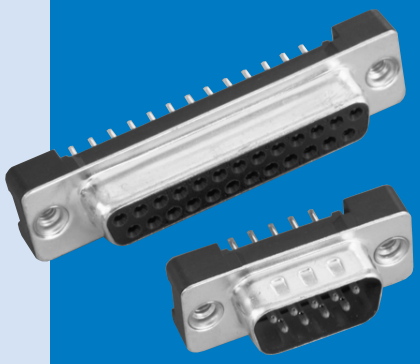

Amphenol's high temperature, low profile D-Sub connector gives you a high quality, reliable commercial connector to meet today's market demands.

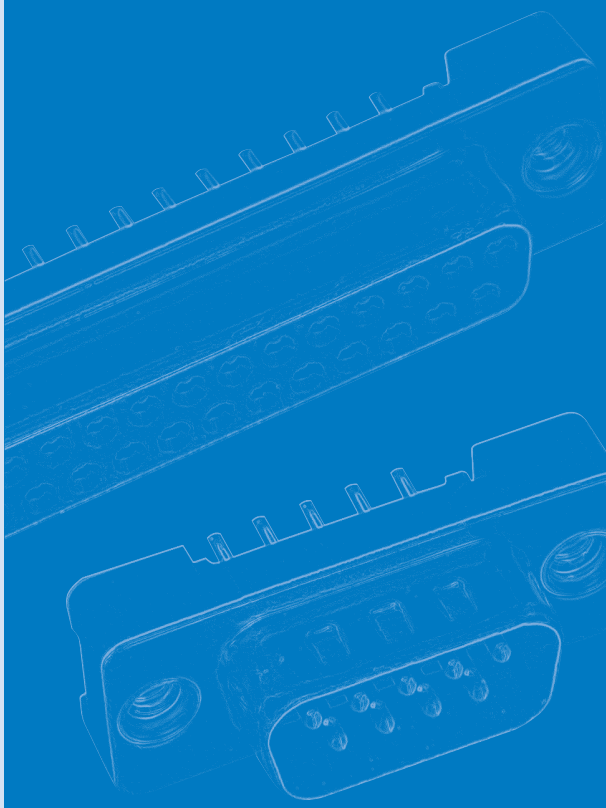

Inches (mm)

Telephone: (416) 754-5656 Fax: (416) 754-8668 E-Mail: sales@amphenolcanada.com

Dimensions

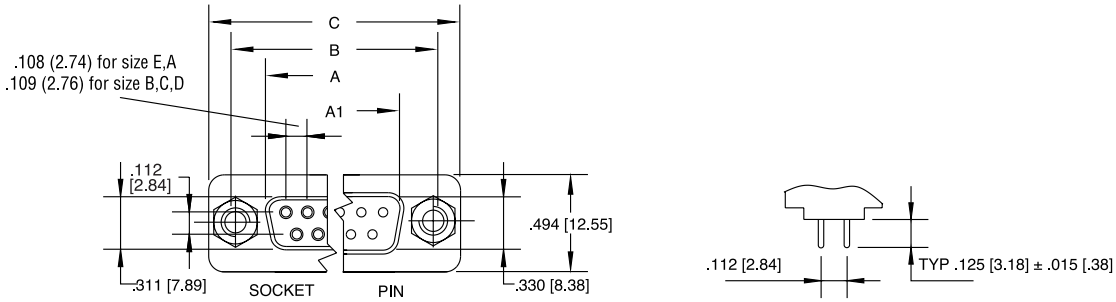

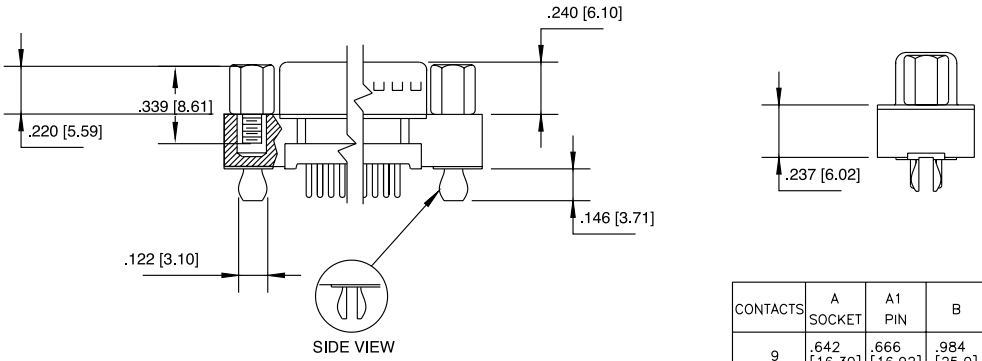

CONTACTS	A SOCKET	A1 PIN	B	C
9	.642 [16.30]	.666 [16.92]	.984 [25.0]	1.213 [30.8]
15	.969 [24.6]	.994 [25.25]	1.311 [33.3]	1.543 [39.2]
25	1.508 [38.3]	1.534 [38.96]	1.854 [47.1]	2.091 [53.1]
37	2.157 [54.8]	2.182 [55.42]	2.50 [63.5]	2.732 [69.4]

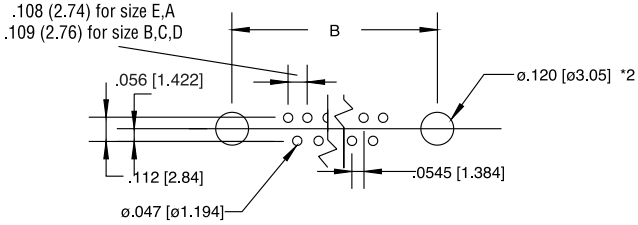

Ordering Information

6E17S C 0XX X XX X XX

Series

Code **Boardlock**
- C Split arrowhead boardlock
- O No boardlock

Number of contacts
9, 15, 25 or 37

Code **Gender**
- P Pin (male)
- S Socket (female)

Code **Contact Plating**
- BJ Engagement area 10µ"(2.54µ) gold, terminal end area 100µ"/200µ"(2.54µ/5.08µ) -tin/lead, underplate of 50µ"(1.27µ) nickel
- AJ Engagement area 30µ"(.76µ) gold, terminal end area 100µ"/200µ"(2.54µ/5.08µ) -tin/lead, underplate of 50µ"(1.27µ) nickel

Code **Panel Mounting Options**
- 1 #4-40 threaded hole
- 2 #4-40 threaded hole with female screwlock
- 3 M-3 threaded hole

Code **Housing Characteristics**
- 20 Tin plated receptacle
- 21 Tin plated

ED-EHD

D-Sub connectors - Screw-machined contacts

STANDARD AND HIGH DENSITY WATERPROOF CONNECTORS

CHARACTERISTICS

Materials and Platings

Shells	Steel 2.5µm(100µ") min tin over 1.25µm(50µ") min nickel
Body	Glass-filled thermoplastic Flame retardant to UL94 V-0 Color Black
Contacts	Copper alloy(Brass for plug, Phospher bronze for socket) gold over 1.25µm(50µ") min nickel
Boardlock	Copper alloy, 100µ" min. sn over 50µ" min. nickel.
Standoff	Copper alloy, 100µ" min. sn over 50µ" min. nickel.

Electrical Data

Current rating	5.0A
Voltage rating	300V rms at 50Hz
Insulation resistance	>5000MΩ
Contact resistance	20mΩ Max.

Climatic Data

Operating temperature	-55°C to +85°C
Salt spray	48 hours
Waterproof rating	IP 67 minimum

Mechanical Data

Mating and unmating force
Unit: kg (lb)

No. of Cts		ED		EHD	
ED	**EHD**	**Mate (max)**	**Unmate (min)**	**Mate (max)**	**Unmate (min)**
9	15	3.05 (6.74)	0.36 (0.79)	3.81 (8.42)	0.52 (1.14)
15	26	5.09 (11.24)	0.46 (1.01)	5.95 (13.16)	1.05 (2.32)
25	44	8.44 (18.66)	0.81 (1.80)	9.26 (20.46)	1.37 (3.02)

Mating cycles
Gold flash : 100 cycles
0.76µm (30µ") : 500 cycles

DESCRIPTION

The 17ED and 17EHD series are suitable for waterproof applications.

The machined contacts provide robustness and reliability.

This series offers:
- Panel mount connectors with solder cup, straight and right angle PCB terminations.

Connectors are waterproof unmated.

Harsh environment connectors

APPLICATIONS

- Marine electronic devices
- Industrial electrical
- Security Monitoring
- Robotics
- Lighting systems

ED-EHD

Amphenol RoHS Compliant EU 2002/95/EC

Termination

Solder cup (blank) :

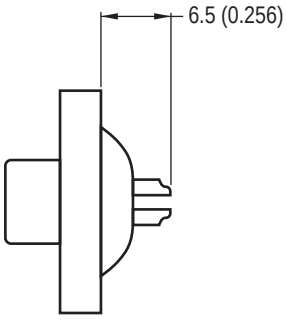

Standard density

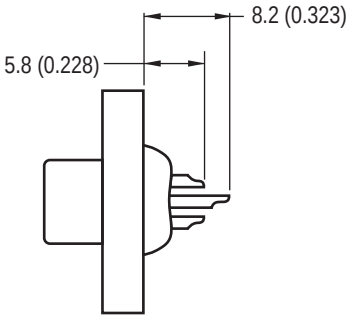

High density

Straight PCB with standoff and boardlocks:

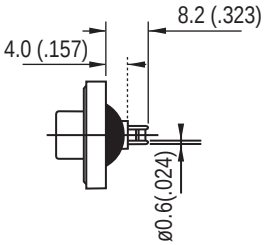

Standard density

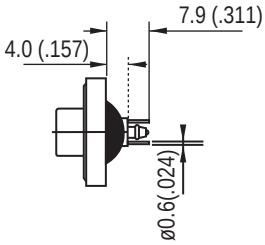

High density

Right angle PCB with brackets and boardlocks:

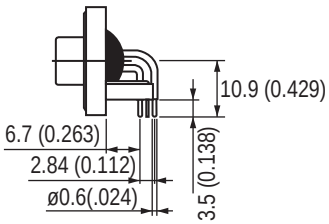

Standard density

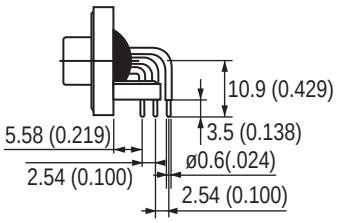

High density

Right angle PCB without brackets and boardlocks:

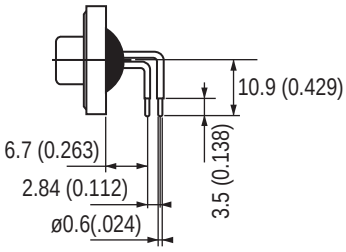

Standard density

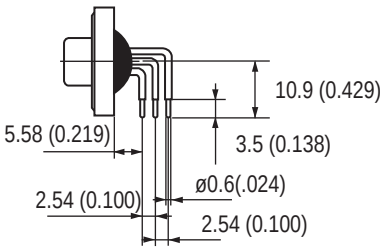

High density

OVERALL DIMENSIONS

Shell Size Dimensions

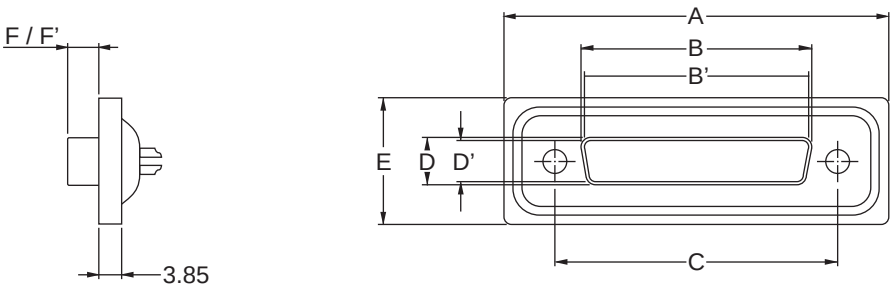

SHELL SIZE	Contact P: pin S: socket	A ±0.25 (±.010)	B 0 / -0.20 (0/-.008	B' +0.20 / 0 (+.008/0)	C ±0.10 (±.004)	D 0 / -0.25 (0/-.010)	D' +0.25 / 0 (+.010/0)	E ±0.25 (±.010)	F +0.10/-0.20 (+.004/-.008)	F' ±0.10 (±.004)
E	P	39.4		16.8(0.661)	25.0		8.2(0.325)	21.0		5.9(0.232)
	S	(1.551)	16.4(0.646)		(0.984)	8.0(0.315)		(0.827)	6.2(0.244)	
A	P	47.7		25.1(0.988)	33.3		8.2(0.325)	21.0		5.9(0.232)
	S	(1.878)	24.8(0.976)		(1.311)	8.0(0.315)		(0.827)	6.2(0.244)	
B	P	64.5		28.8(1.528)	47.0		8.2(0.325)	21.0		5.9(0.232)
	S	(2.539)	38.5(1.513)		(1.850)	8.0(0.315)		(0.827)	6.2(0.244)	

Panel cutouts

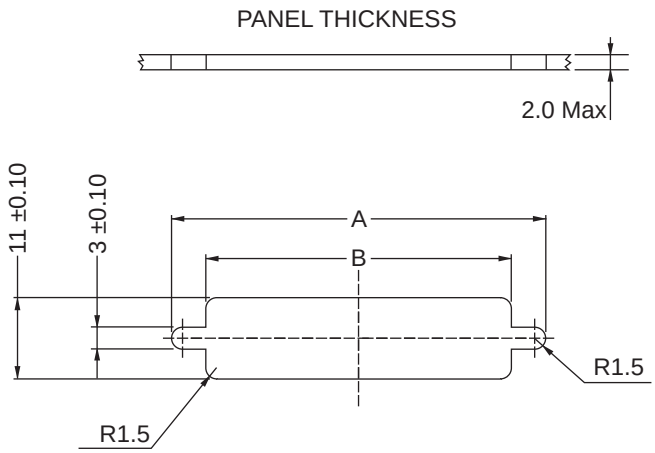

SHELL SIZE	A ±0.10(±.004)	B 0 / -0.10(0 / -.004)
E	28.8 (1.111)	20.0 (0.788)
A	36.5 (1.438)	28.0 (1.103)
B	51.0 (2.009)	41.5 (1.635)

Amphenol

NOTES

Connector Dimensions

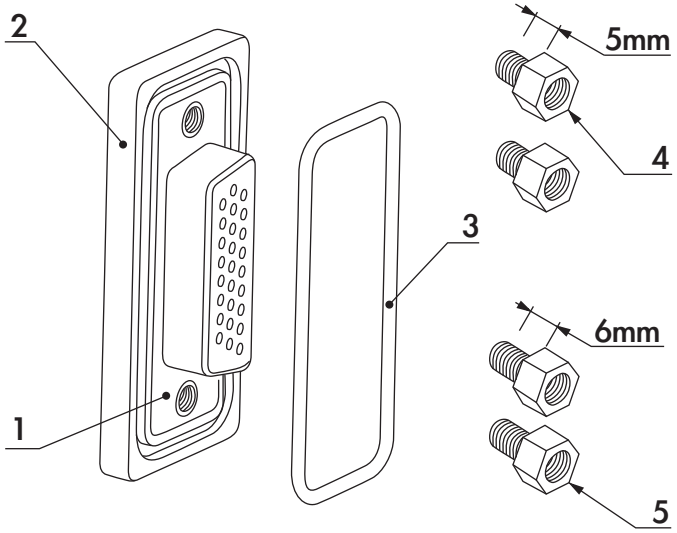

NO	Description	Material	Qty
2	Housing	Black thermoplastic UL 94-VO	1
1	Front shell	Steel tin plated	1
3	Ring	Silicone	1
4	#4-40 Front screw lock	Brass tin plated	2
5	#4-40 Front screw lock	Brass tin plated	2

How to order

L17 ED ... ...

L17ED: standard density series
L17EHD: high densty series

Number of contacts
Standard density: 9, 15, 25
High density: 15, 26, 44

Contact type:
P : Pin
S : Socket

contact plating:
0 : gold flash
1 : 0.38µm gold (15µ")
2 : 0.76µm gold (30µ")

Termination:
0 : Solder cup
1 : Straight PCB without stand-off or boarlocks
2 : Straight PCB with stand-off and boarlocks
3 : Right angle PCB without brackets or boarlocks
4 : Right angle PCB with brackets and boarlocks

For special request, please consult factory

Do not hesitate to contact us for further information

Amphenol
Amphenol IT & Communication Products
Block A3/A4, The 4th Industrial District of
Industrial Headquarters, Dong Keng Road
Gong Ming Town, Shen Zhen China
Fax:+86(0)755 2754 9955
Technical Support

information given in this document are as a guideline only. We reserve the right to modify our products in any way we deem necessary. Any duplication is prohibited, unless approved in writing.

TW

Hybrid D'Sub series

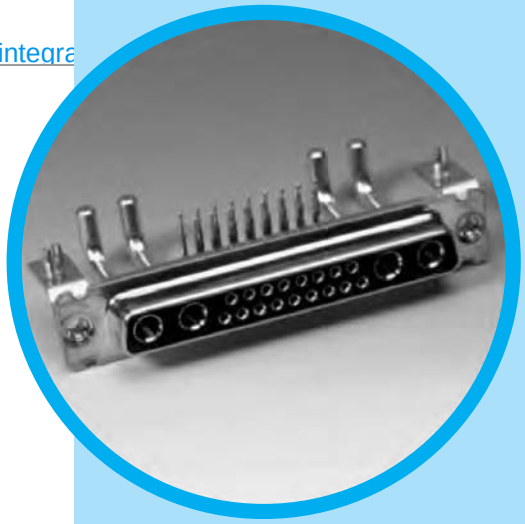

CONTENT

Specifications

- **Connectors according to: MIL C24308 - NFC93425 - HE507**

Materials and platings	
Shells	Steel-Tin plating
Insulators	High temperature black thermoplastic
Signal contacts	Female: machined bronze
Material	Male: machined brass
Plating finish	16µ "Au over 79µ" Ni min.
Or	30µ" Au over 79µ" Ni min.
Shielded contacts	Female: machined bronze
Material	Male: machined brass
Plating	
Inner conductor	16µ "Au or 30µm Au over 79µ" Ni
Outer ring	10µ "Au over 79µ" Ni
Terminations	Tinned
Except solder cup and crimp terminations	gold flash
Power contacts	Female: machined bronze
Material	Male: machined brass
Plating	
Contacts	16µ "Au or 30µ" Au over 79µ" Ni
Terminations	Tinned
Except solder cup and crimp terminations	gold flash
Brackets	Steel-Tin plating
Front jackscrews	Brass-Tin plating
Rear clinch nuts	Brass-Tin plating
Boardlocks	Bronze-Tin plating
Stand-off	Brass-Tin plating

Electrical Data	
Current rating	
Signal contacts	7.5 A. with 10 A. peaks
Power contacts	
PCB terminations	10 to 40 A.
Solder cup terminations	10 to 40 A.
Crimp terminations	10 to 40 A.
Shielded contacts	0.5 A.
Voltage rating	
Signal and power contacts	300 V.R.M.S. at 50 Hz
Shielded contacts	150 V.R.M.S. at 50 Hz
Shielded contacts	
Frequency range	0-1 GHz
Attenuation	0.2dB
V. S. W. R.	1.4(+0.04/GHz)
Characteristic impedance	50 Ohms
Dielectric withstanding voltage	≥ 1000 V.R.M.S. at 50Hz
Insulation resistance	≥ 5000 M Ohms at 500 VDC
Contact resistance	≤ 5m Ohms
Shell resistance (electrical grounding)	≤ 1m Ohm

Climatic Data	
Operating temperature	-55˚C + 155˚C (with peaks up to 180˚C)
Damp heat	56 days (40˚C - 95% HR)
Salt spray	48 hours

Mechanical data	
Shells	With or without dimples
Contact retention force in dielectric material	> 40N
Maximum mating and unmating force	
With dimples	E size = 70 N
	A size = 80 N
	B size = 100 N
	C size = 150 N
	D size = 180 N
Without dimples	E size = 30 N
	A size = 50 N
	B size = 80 N
	C size = 120 N
	D size = 160 N
Compatible with process	
IR - Air convectioned	260˚ for 20 s.
Resistance to solder iron heat	260˚C for 30 s.
Mating cycles	≥ 200 (classe II) or 500 (classe I)
Blind mating system	Available upon request
Polarization	Available with locking accessories Consult factory

DESCRIPTION

Amphenol D'Sub TW Hybrid Series permits a mix of contacts including signal, power, shielded, high voltage and fiber optics in the same housing with 18 different contacts arrangements.

This economic series was fist developed from our military series, and has improved features:

- new contacts
- new high temperature black thermoplastic insert
- PCB configurations come preloaded with fixed contacts and brackets.

These connectors are supplied with screw machined contacts which are fixed in the insulator.

Acomplete range of housings are also available for cable application.

A full range of arrangements compatible with reflow process

APPLICATIONS

- Commercial
- Medical
- Industrial
- Telecom
- Any application requiring optimization of space

TW / E1

Amphenol RoHS Compliant EU 2002/95/EC

Shell and contacts plating

CLASS II
0.4µm (16µ") Au contacts gold plating
200 mating cycles

Types	Shells and plating
77 TW	Tin plated shell **Male and female*
717 TW	Tin plated shell with dimples *Male only*

CLASS I
0.76µm (30µ") Au contacts gold plating
500 mating cycles

Types	Shells and plating
177 TW	Tin plated shell **Male and female*
777 TW	Tin plated shell with dimples *Male only*

Housing arrangements

Male front view

Arrangement ..... Shell size	 5W1 **E**	 7W2 **A**	 11W1 **A**
Arrangement ..... Shell size	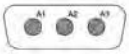 3W3 **A**	 5W5 **B**	 9W4 **B**
Arrangement ..... Shell size	 13W3 **B**	 17W2 **B**	 21W1 **B**
Arrangement ..... Shell size	 27W2 **C**	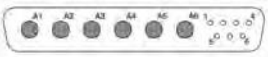 13W6 **C**	 17W5 **C**
Arrangement ..... Shell size	 21W4 **C**	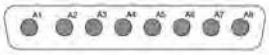 8W8 **C**	 25W3 **C**
Arrangement ..... Shell size	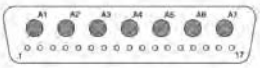 24W7 **D**	 36W4 **D**	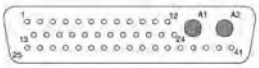 43W2 **D**

Shell size dimensions

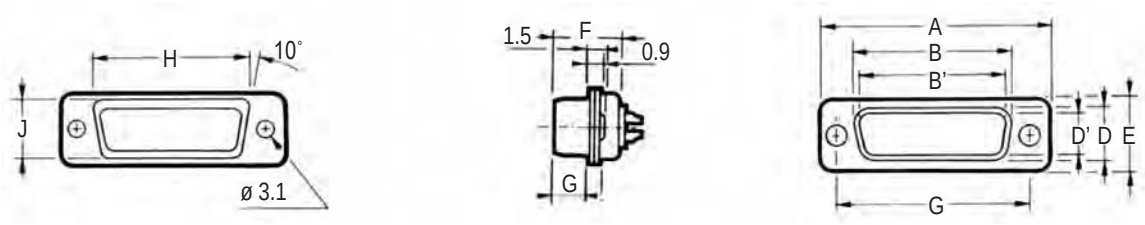

Shell size	Contact P: Pin S: Socket	A ±0.25 (±.010)	B 0/-0.20 (0/-.008)	B' +0.20/0 (+.008/0)	C ±0.10 (±.004)	D 0/-0.25 (0/-.010)	D' +0.25/0 (+.010/0)	E ±0.20 (±.008)	F +0.05/-0.20 (+.002/-.008)	F' +0.10/-0.20 (+.004/-.008)	G +0.10/-0.20 (+.004/-.008)	G' ±0.10 (±.004)	H +0.10/-0.40 (+.004/-.016)	J 0/-0.50 (0/-.020)
E	P	30.7 (1.209")		16.8 (.661")	25.0 (.984")		8.2 (.323")	12.4 (.488")		10.9 (.429")		5.9 (.232")	19.4 (.764")	11.0 (.433")
	S		16.4 (.646")			8.0 (.315")			11.1 (.437)		6.2 (.244")			
A	P	39.0 (1.535")		25.1 (.988")	33.3 (1.311")		8.2 (.323")	12.4 (.488")		10.9 (.429")		5.9 (.232")	27.7 (1.091")	11.0 (.433")
	S		24.8 (.976")			8.0 (.315")			11.1 (.437)		6.2 (.244")			
B	P	52.9 (2.083")		38.8 (1.528")	47.0 (1.850")		8.2 (.323")	12.4 (.488")		11.0 (.433")		5.8 (.228")	41.4 (1.630")	11.0 (.433")
	S		38.5 (1.513")			8.0 (.315")			11.1 (.437)		6.2 (.244")			
C	P	69.2 (2.724")		55.3 (2.177")	63.5 (2.500")		8.2 (.323")	12.4 (.488")		11.0 (.433")		5.8 (.228")	57.9 (2.280")	11.0 (.433")
	S		54.9 (2.161")			8.0 (.315")			11.1 (.437)		6.2 (.244")			
D	P	66.8 (2.630")		52.7 (2.075")	61.1 (2.406")		11.0 (.433")	15.2 (.598")		11.0 (.433")		5.8 (.228")	55.5 (2.185")	13.8 (.543")
	S		52.5 (2.067")			10.9 (.429")			11.1 (.437)		6.2 (.244")			

Panel cutouts

Optimal cutout for rear mounting

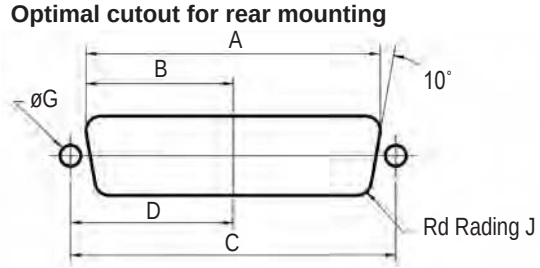

Standard cutout

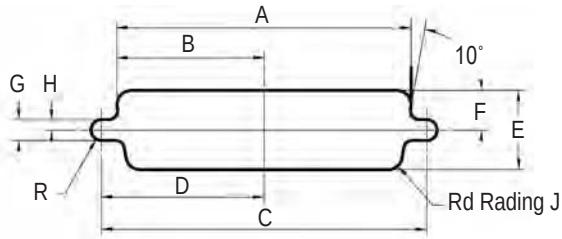

Shell size	Mounting method	A ±0.20 (±.008)	B ±0.20 (±.008)	C ±0.20 (±.008)	D ±0.20 (±.008)	E ±0.20 (±.008)	F ±0.20 (±.008)	G ±0.20 (±.008)	H ±0.20 (±.008)	J ±0.20 (±.008)
E	Front	22.2 (.874")	11.1 (.437")	25.0 (.984")	12.5 (.492")	13.0 (.512")	6.5 (.256")	3.0 (.118")	1.5 (.059")	2.1 (.083")
	Rear	20.5 (.807")	10.2 (.402")			11.4 (.449")	5.7 (.224")			3.4 (.0134")
A	Front	30.5 (1.201")	15.3 (.602")	33.3 (1.311")	16.7 (.657")	13.0 (.512")	6.5 (.256")	3.0 (.118")	1.5 (.059")	2.1 (.083")
	Rear	28.8 (1.134")	14.4 (.567")			11.4 (.449")	5.7 (.224")			3.4 (.0134")
B	Front	44.3 (1.744")	22.1 (.870")	47.0 (1.850")	23.5 (.925")	13.0 (.512")	6.5 (.256")	3.0 (.118")	1.5 (.059")	2.1 (.083")
	Rear	42.5 (1.673")	21.3 (.839")			11.4 (.449")	5.7 (.224")			3.4 (.0134")
C	Front	60.7 (2.390")	30.4 (1.197")	63.5 (2.500")	31.7 (1.248")	13.0 (.512")	6.5 (.256")	3.0 (.118")	1.5 (.059")	2.1 (.083")
	Rear	59.1 (2.327")	29.5 (1.161")			11.4 (.449")	5.7 (.224")			3.4 (.0134")
D	Front	58.3 (2.295")	29.2 (1.150")	61.1 (2.406")	30.6 (1.205")	15.8 (.622")	7.9 (.311")	3.0 (.118")	1.5 (.059")	2.1 (.083")
	Rear	56.3 (2.217")	28.2 (1.110")			14.1 (.555")	7.1 (.280")			3.4 (.0134")

Straight connector footprint

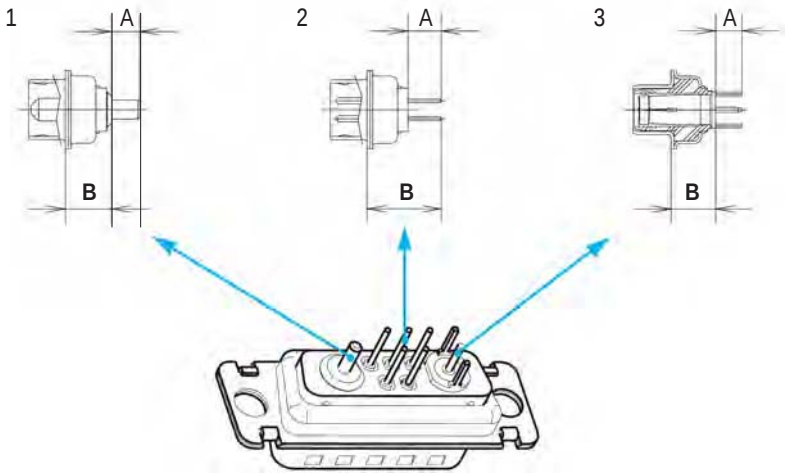

Signal tail 0.6 mm Dia. (.0236")
1.6 mm (.063")PCB
For other PCB thickness: consult factory.

Description		Dimensions a	Dimensions b
Power (.126" tail dia.)	1	4.80 mm (.198")	7.2 mm (.283")
Power (.0787" tail dia.)	1	4.80 mm (.198")	7.2 mm (.283")
Shielded	3	4.00 mm (.157")	7.2 mm (.283")
Signal	2	5.00 mm (.196")	11.50 mm (.453")

Straight contact combinations

Arrangement with signal contacts

See above dimensions	Size 8 and 20 Contacts
P 3SY	Power 3.2 mm DIA. (.126") (20 to 40 A) and signal
P 2SY	Power 2 mm DIA. (.0787") (10 to 20 A) and signal
CSY	Shielded and signal
SY	Signal only
No reference	Signal (Size 20) with solder cup terminations *Housing preloaded with contacts*

Arrangement without signal contacts
3W3 - 5W5 - 8W8

See above dimensions	Size 8 Contacts
P 3Y	Power only 3.2 mm DIA. (.126") (20 to 40 A)
P 2Y	Power only 2 mm DIA. (.0787") (10 to 20 A)
CY	Shielded only

Right angle connector footprint

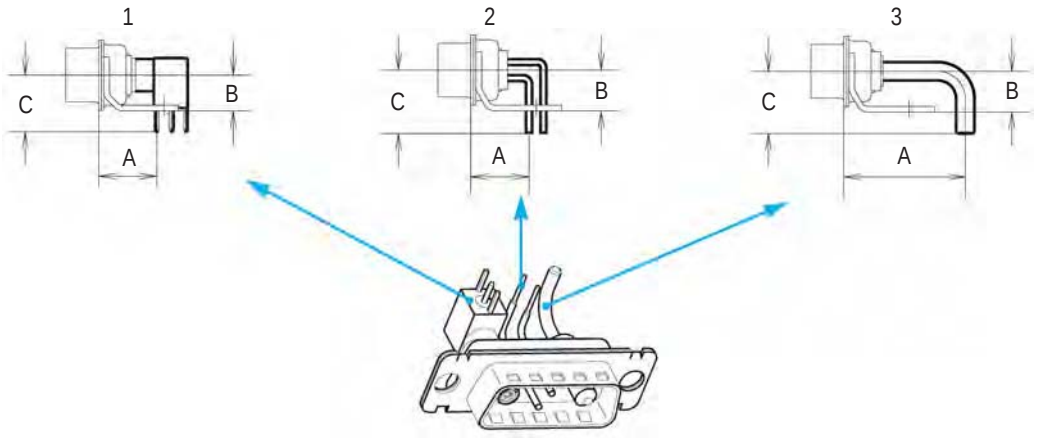

Signal tail 0.6 mm Dia. (.0236")
1.6 mm (.063") PCB
For other PCB thickness: consult factory.

		Europe			Mix			MIL		
		HE 5 pattern = **- Europ. height** **- Europ. footprint** *pitch between 2 rows: .100"*			**Mixed pattern =** **- MIL height** **- Europ. footprint** *pitch between 2 rows: .100"*			**MIL pattern =** **- MIL height** **- MIL footprint** *pitch between 2 rows: .112"*		
Description		a	b	c	a	b	c	a	b	c
Shielded	1	-	-	-	10.30mm (.406")	6.30mm (.248")	10.00mm (.394")	10.30mm (.406")	6.30mm (.248")	10.00mm (.394")
Signal	2	10.30mm (.406")	7.20mm (.283")	11.20mm (.441")	10.30mm (.406")	6.30mm (.248")	9.50mm (.374")	8.10mm (.319")	6.30mm (.248")	9.50mm (.374")
Power (.0787" tail dia.)	3	11.57mm (.456")	7.20mm (.283")	10.50mm (.413")	11.57mm (.456")	6.30mm (.248")	9.50mm (.374")	9.52mm (.375")	6.30mm (.248")	9.50mm (.374")
Power (.126" tail dia.)	3	21.46mm (.845")	7.20mm (.283")	10.50mm (.413")	21.46mm (.845")	6.30mm (.248")	9.50mm (.374")	21.46mm (.845")	6.30mm (.248")	9.50mm (.374")

Note: above dimensions correpond to sizes E to C. Consult factory for D sizes.
Connector comes equiped with contacts and brackets.

Right angle contacts combinations

Arrangement with signal contacts

European footprint	Mixed footprint	MIL (U.S.) footprint	Size 8 and 20 Contacts
EP3SV	HP3SV	MP3SV	Power 3.2 mm DIA. (.126") (20 to 40 A) and signal
EP2SV	HP2SV	MP2SV	Power 2 mm DIA. (.0787") (10 to 20 A) and signal
-	HCSV	MCSV	Shielded and signal
ESV	HSV	MSV	Signal only

Arrangement without signal contacts
3W3 - 5W5 - 8W8

European footprint	Mixed footprint	MIL (U.S.) footprint	Size 8 contacts only
EP3V	HP3V	MP3V	Power only 3.2 mm DIA. (.126") (20 to 40 A)
EP2V	HP2V	MP2V	Power only 2.0 mm DIA. (.0787") (10 to 20 A)
-	HCV	MCV	Shielded only

Mounting options

Right angle version
Connectors come equiped with metal brackets

BLANK: 3.10mm (.122”) dia mounting hole

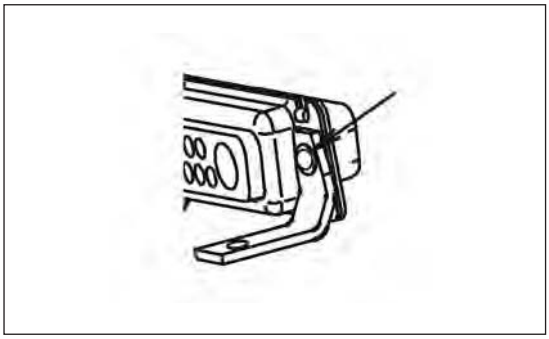

RM6: metal brackets + boardlock

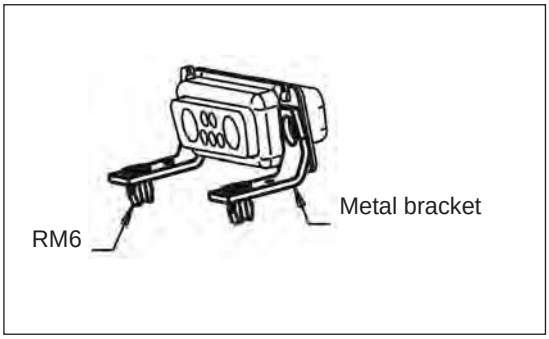

Straight version

BLANK: 3.10mm (.122”) dia mounting hole

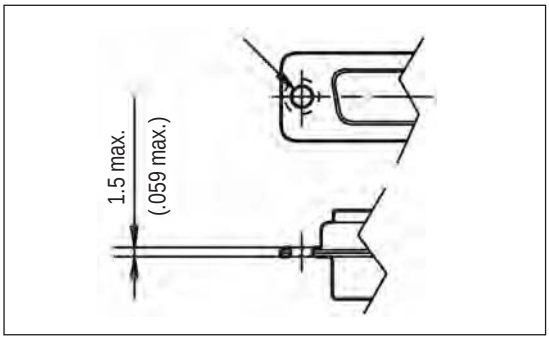

RM54: RM5 4.40 threaded
RM53: RM5 M3 threaded

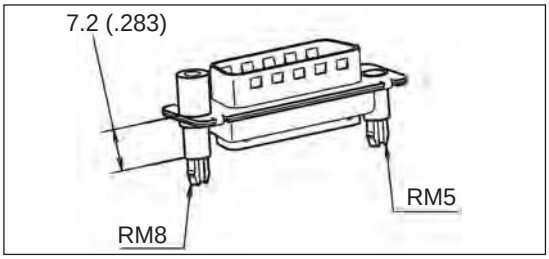

RM84: RM8 4.40 threaded
RM83: RM8 M3 threaded

A514: blind mating system

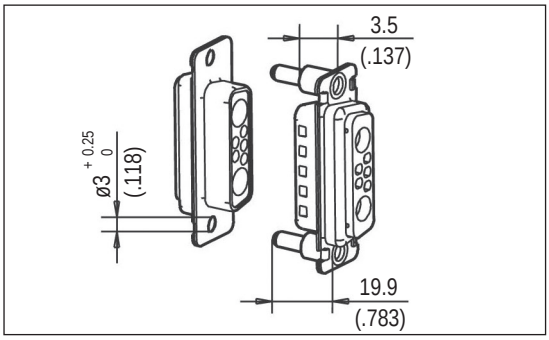

FM: float mounting system

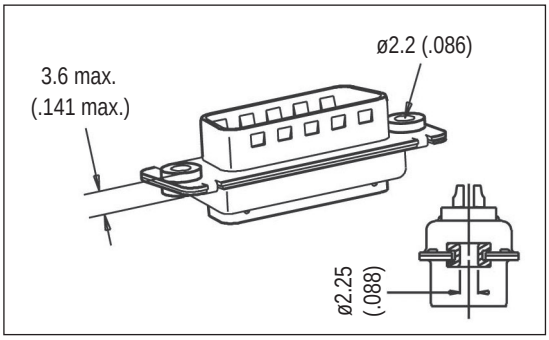

Straight and right angle version

4R: 4.40 rear nut
3R: M3 rear nut

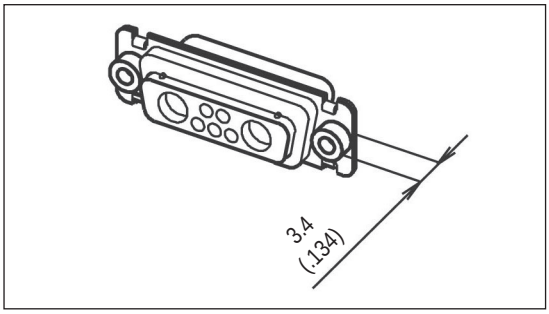

4F: 4.40 front female screwlock
3F: M3 front female screwlock

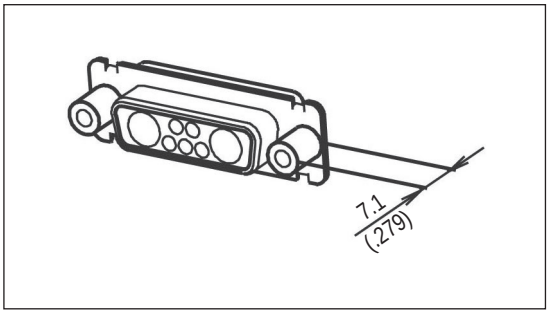

High power contacts

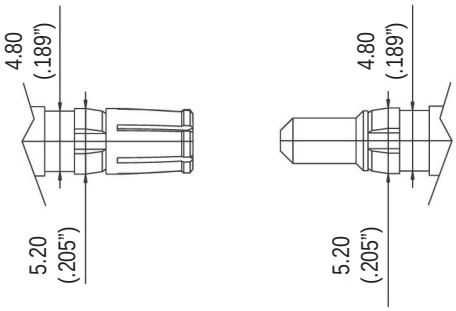

Solder cup version

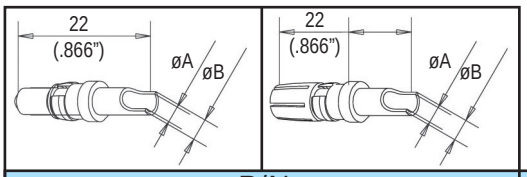

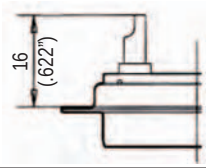

P/N		Current	Dimensions	
Plug	Socket		A mm (inch)	B mm (inch)
L 17DM 53745-8	L 17DM 53744-7	10 to 20 Amp.	1.80 (.071")	2.55 (.100")
L 17DM 53745-7	L 17DM 53744-6	20 to 30 Amp.	2.80 (.110")	3.70 (.145")
L 17DM 53745-1	L 17DM 53744-1	30 to 40 Amp.	4.80 (.189")	5.60 (.220")

Trim dimensions: 7.5 mm (.295")

Crimp version

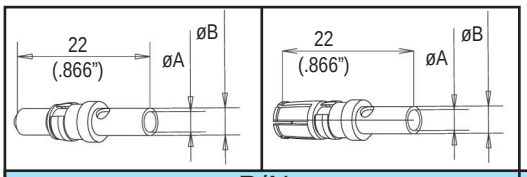

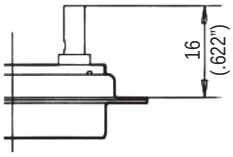

P/N		Current	Dimensions	
Plug	Socket		A mm (inch)	B mm (inch)
L 17DM 53745-208	L 17DM 53744-207	10 to 20 Amp.	1.80 (.071")	2.55 (.100")
L 17DM 53745-207	L 17DM 53744-206	20 to 30 Amp.	2.80 (.110")	3.70 (.145")
L 17DM 53745-201	L 17DM 53744-201	30 to 40 Amp.	4.80 (.189")	5.60 (.220")

Trim dimensions: 7.5 mm (.295")

Crimping tool for all sizes
L17D479SP

Extraction tool for sizes 8 cts

Straight shielded contacts

Crimp ferrule and inner solder

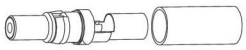
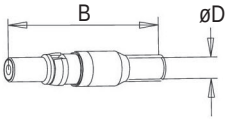

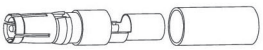
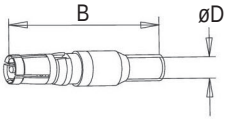

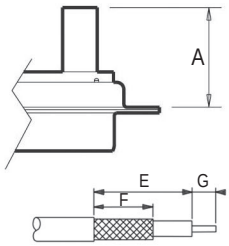

Type	P/N	Dimensions (inch)			Cable - RG	Trim dimensions (inch)		
		A Max	B	D		E	F	G
plug	L17DM 53740	18.8 (740”)	23.6 (.929”)	1.0 (.039”)	178 B/U	7.9 (.311”)	6.3 (.248”)	2 (.078”)
plug	L17DM 53740-1	18.8 (740”)	23.6 (.929”)	1.7 (.066”)	179 B/U 316 B/U	7.9 (.311”)	6.3 (.248”)	2 (.078”)
plug	L17DM 53740-3	21.5 (846”)	23.6 (.929”)	2.8 (.110”)	180 B/U	9.5 (.374”)	7.9 (.311”)	2 (.078”)
plug	L17DM 53740-5	21.5 (846”)	23.6 (.929”)	3.2 (.126”)	58 C/U	9.5 (.374”)	7.9 (.311”)	2 (.078”)
socket	L17DM 53742	18.8 (740”)	23.6 (.929”)	1.0 (.039”)	178 B/U	7.9 (.311”)	6.3 (.248”)	2 (.078”)
socket	L17DM 53742-1	18.8 (740”)	23.6 (.929”)	1.7 (.066”)	179 B/U 316 B/U	7.9 (.311”)	6.3 (.248”)	2 (.078”)
socket	L17DM 53742-3	21.5 (846”)	23.6 (.929”)	2.8 (.110”)	180 B/U	9.5 (.374”)	7.9 (.311”)	2 (.078”)
socket	L17DM 53742-5	21.5 (846”)	23.6 (.929”)	3.2 (.126”)	58 C/U	9.5 (.374”)	7.9 (.311”)	2 (.078”)

Ferrule and inner solder

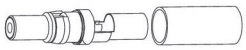
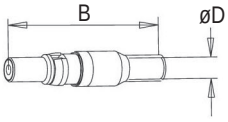

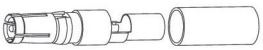
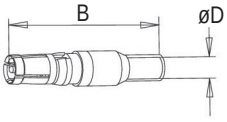

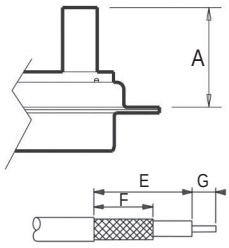

Type	P/N	Dimensions (inch)			Cable - RG	Trim dimensions (inch)		
		A Max	B	D		E	F	G
short plug	L17DM 53740-5000	17.0 (669”)	21.8 (.858”)	1.0 (.039”)	178 B/U	7.9 (.311”)	6.3 (.248”)	2 (.078”)
plug	L17DM 53740-5001	18.8 (740”)	23.6 (.929”)	1.7 (.066”)	179 B/U 316 B/U	7.9 (.311”)	6.3 (.248”)	2 (.078”)
plug	L17DM 53740-5002	21.5 (846”)	26.3 (1.035”)	2.8 (.110”)	180 B/U	9.5 (.374”)	7.9 (.311”)	2 (.078”)
plug	L17DM 53740-5005	21.5 (846”)	26.3 (1.035”)	3.2 (.126”)	58 C/U	9.5 (.374”)	7.9 (.311”)	2 (.078”)
plug	L17DM 53740-5008	18.8 (740”)	23.6 (.929”)	1.0 (.039”)	178 B/U	7.9 (.311”)	6.3 (.248”)	2 (.078”)
short socket	L17DM 53742-5000	17.0 (669”)	21.8 (.858”)	1.0 (.039”)	178 B/U	7.9 (.311”)	6.3 (.248”)	2 (.078”)
socket	L17DM 53742-5001	18.8 (740”)	23.6 (.929”)	1.7 (.066”)	179 B/U 316 B/U	7.9 (.311”)	6.3 (.248”)	2 (.078”)
socket	L17DM 53742-5002	21.5 (846”)	26.3 (1.035”)	2.8 (.110”)	180 B/U	9.5 (.374”)	7.9 (.311”)	2 (.078”)
socket	L17DM 53742-5004	21.5 (846”)	26.3 (1.035”)	3.2 (.126”)	58 C/U	9.5 (.374”)	7.9 (.311”)	2 (.078”)
socket	L17DM 53742-50060	18.8 (740”)	23.6 (.929”)	1.0 (.039”)	178 B/U	7.9 (.311”)	6.3 (.248”)	2 (.078”)

Right angled shielded contact

Crimp ferrule and inner solder

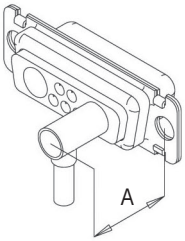

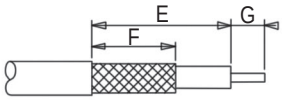

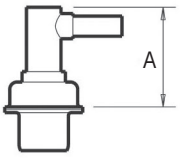

Type	P/N	Dimensions (inch)			Cable - RG	Trim dimensions (inch)		
		A Max	B	D		E	F	G
plug	L17DM 53741	13.5 (.531”)	18.6 (.732”)	1.0 (.039”)	178 B/U	9.5 (.374”)	5.9 (.232”)	1.6 (.062”)
plug	L17DM 53741-1	13.5 (.531”)	18.6 (.732”)	1.7 (.066”)	179 B/U 316 B/U	9.5 (.374”)	5.9 (.232”)	1.6 (.062”)
plug	L17DM 53741-3	13.5 (.531”)	18.6 (.732”)	2.8 (.110”)	180 B/U	10.7 (.421”)	7.9 (.311”)	2.4 (.094”)
plug	L17DM 53741-4	13.5 (.531”)	18.6 (.732”)	3.2 (.126”)	58 C/U	10.7 (.421”)	7.9 (.311”)	2.4 (.094”)
socket	L17DM 53743-2	13.5 (.531”)	18.6 (.732”)	1.0 (.039”)	178 B/U	9.5 (.374”)	5.9 (.232”)	1.6 (.062”)
socket	L17DM 53743-3	13.5 (.531”)	18.6 (.732”)	1.7 (.066”)	179 B/U 316 B/U	9.5 (.374”)	5.9 (.232”)	1.6 (.062”)
socket	L17DM 53743-5	13.5 (.531”)	18.6 (.732”)	2.8 (.110”)	180 B/U	10.7 (.421”)	7.9 (.311”)	2.4 (.094”)
socket	L17DM 53743-6	13.5 (.531”)	18.6 (.732”)	3.2 (.126”)	58 C/U	10.7 (.421”)	7.9 (.311”)	2.4 (.094”)

Ferrule and inner solder

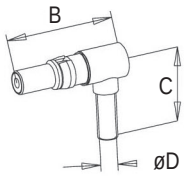

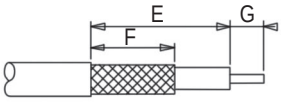

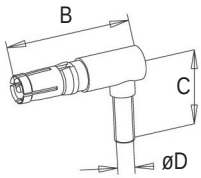

Type	P/N	Dimensions (inch)				Trim dimensions (inch)		
		A Max	B	D	Cable - RG	E	F	G
plug	L17DM 53741-5000	13.5 (.531”)	18.6 (.732”)	1.0 (.039”)	178 B/U	9.5 (.374”)	5.9 (.232”)	1.6 (.062”)
plug	L17DM 53741-5001	13.5 (.531”)	18.6 (.732”)	1.7 (.066”)	179 B/U 316 B/U	9.5 (.374”)	5.9 (.232”)	1.6 (.062”)
plug	L17DM 53741-5003	13.5 (.531”)	18.6 (.732”)	2.8 (.110”)	180 B/U	10.7 (.421”)	7.9 (.311”)	2.4 (.094”)
plug	L17DM 53741-5004	13.5 (.531”)	18.6 (.732”)	3.2 (.126”)	58 C/U	10.7 (.421”)	7.9 (.311”)	2.4 (.094”)
socket	L17DM 53743-5000	13.5 (.531”)	18.6 (.732”)	1.0 (.039”)	178 B/U	9.5 (.374”)	5.9 (.232”)	1.6 (.062”)
socket	L17DM 53743-5001	13.5 (.531”)	18.6 (.732”)	1.7 (.066”)	179 B/U 316 B/U	9.5 (.374”)	5.9 (.232”)	1.6 (.062”)
socket	L17DM 53743-5003	13.5 (.531”)	18.6 (.732”)	2.8 (.110”)	180 B/U	10.7 (.421”)	7.9 (.311”)	2.4 (.094”)
socket	L17DM 53743-5004	13.5 (.531”)	18.6 (.732”)	3.2 (.126”)	58 C/U	10.7 (.421”)	7.9 (.311”)	2.4 (.094”)

Crimping tool

Hand crimp tool

227-0944 (without dies) (M 22 520/5-01)

RG cables	MIL reference	Amphenol P/N	dim. between 2 flat surface	
			cavity A	cavity B
RG 58 C/U	M 22 520/5-05	227 1221-05	5.41	-
RG 178 B/U	M 22 520/5-03	227 1221-03	-	2.67
RG 179 B/U	M 22 520/5-03	227 1221-03	3.25	-
RG 180 B/U	M 22 520/5-05	227 1221-05	-	4.52

Extraction tool

Extraction tool for sizes 8 cts
L17D429SP

Cabling instructions for shielded contacts

Straight crimp shielded contacts:

inner solder contact
outer crimp contact

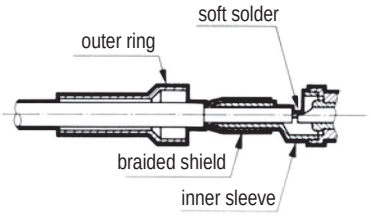

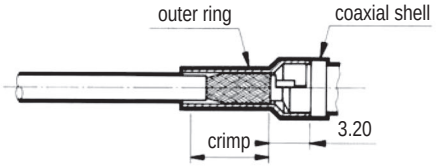

Right angle crimp shielded contacts:

inner solder contact
outer crimp contact

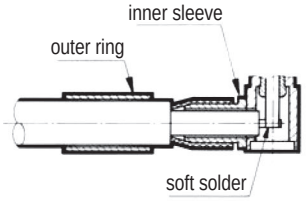

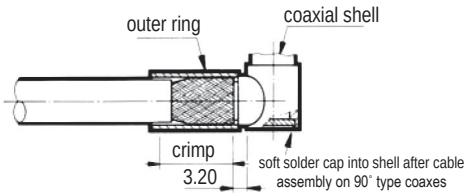

Assembly method

- Slide the outer ring over the cable jacket. Trim the cable according to the recommended dimensions.
- Insert the cable dielectric and the center conductor inside the inner sleeve.
- Solder the central conductor to the shielded center contacts.
- Slide the outer ring towards the inner sleeve ans recover the braid.
- Using crimp hand tool equipped with the appropriate dies, crimp in the area defined.

Solder straight shielded contacts:

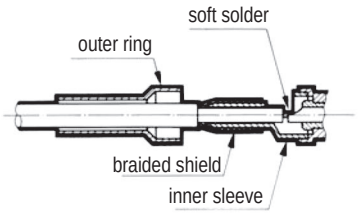

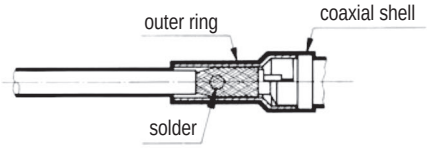

Solder right angle shielded contacts:

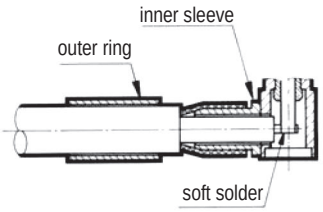

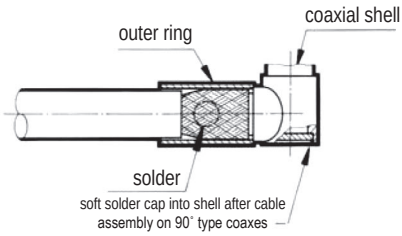

Assembly method

- Slide the outer ring over the cable jacket. Trim the cable according to the recommended dimensions.
- Insert the cable dielectric and the center conductor inside the inner sleeve.
- Solder the central conductor to the shielded center contacts.
- Slide the outer ring towards the inner sleeve ans recover the braid.
- Solder by introducing metal through the outer ring hole.

How to build your part number

L ... TW ... ...

RoHS Compliant

Contacts and Shell

Contact Plating	Shell	
	Tinned	Tinned & Indents; Plug only
0.4µm(16µ") Au	77	717
0.76µm(30µ") Au	177	777

Shell size and Configuration:
E5W1, A3W3, A7W2, A11W1, B5W5, B9W4, B13W3, B17W2, B21W1, C8W8, C13W6, C17W5, C21WA4 C25W3, C27W2, D24W7, D36W4, D43W2

Gender:
P: Pin
S: Socket

Contacts:

For straight
BLANK: Solder-cup signal contacts only
P3SY: 20-40 Amp power & signal mix
P2SY: 10-20 Amp power & signal mix
CSY: Coax & signal mix
SY: Signal only
P3Y: 20-40 Amp power only (3W3, 5W5, 8W8)
P2Y: 10-20 Amp power only (3W3, 5W5, 8W8)
CY: Coax only (3W3, 5W5, 8W8)

For right angle
MP3SV: US Footprint, 20-40 Amp power & signal mix
MP2SV: US Footprint, 10-20 Amp power & signal mix
MCSV: US Footprint, Coax & signal mix
MSV: US Footprint, Signal only
MP3V: US Footprint, 20-40 Amp power only (3W3, 5W5, 8W8)
MP2V: US Footprint, 10-20 Amp power only (3W3, 5W5, 8W8)
MCV: US Footprint, Coax only (3W3, 5W5, 8W8)
EP3SV: European Footprint, 20-40 Amp power & signal mix
EP2SV: European Footprint, 10-20 Amp power & signal mix
ESV: European Footprint, Signal only
EP3V: European Footprint, 20-40 Amp power only (3W3, 5W5, 8W8)
EP2V: European Footprint, 10-20 Amp power only (3W3, 5W5, 8W8)
HP3SV: Mixed Footprint, 20-40 Amp power & signal mix
HP2SV: Mixed Footprint, 10-20 Amp power & signal mix
HCSV: Mixed Footprint, Coax & signal mix
HSV: Mixed Footprint, Signal only
HP3V: Mixed Footprint, 20-40 Amp power only (3W3, 5W5, 8W8)
HP2V: Mixed Footprint, 10-20 Amp power only (3W3, 5W5, 8W8)
HCV: Mixed Footprint, Coax only (3W3, 5W5, 8W8)

Special Deviations
Please consult factory

Board Mounting Options
For Straight
Blank: .120"(3.05mm) Clear Hole
RM53: M3 Threaded (panel side) standoff with boarlock
RM54: 4-40UNC Threaded (panel side) standoff with boardlock
RM84: Non-Removable M3 screwlock, with standoff and boardlock
For Right Angle
RM6: Metal bracket with boardlocks

Panel Mounting Options
For right angle & cable mount
Blank: .120"(3.05mm) Clear Hole
3F: M3 Front Screwlock
3R: M3 Rear Threaded Insert
4F: #4-40 Front Screwlock
4R: #4-40 Threaded Rear Insert
FM: Float mount system
A514: Blind Mate Guide Pin

SM2

D-Sub connectors - Stamped and Formed Contacts

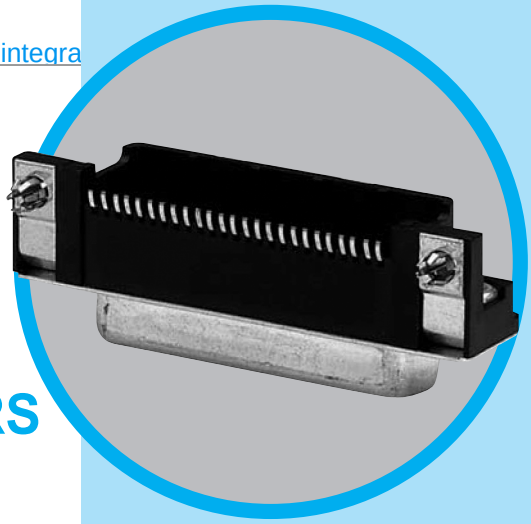

SURFACE MOUNT CONNECTORS

CHARACTERISTICS

Specifications

• Connectors according to MIL C24308 - NFC 93425-HE5

Materials and Platings	
Shells	Steel with tin plating
Insulator	High temperature (peak at 260°C) glass-filled thermoplastic, UL 94V-0
Socket contact	Stamped and formed brass, selected gold in mating area; 2.54µm (100µ") min. tin on termination area, with entire contact under-plated 1.27µm (50µ") min. nickel
Rear insert	Brass, 3µm up to 5µm (118µ" up to 197µ") tinned over nickel 2µm up to 3 µm (78µ" to 118µ")
Boardlock	Tin plating 4µm up to 6µm (157µ" up to 236µ") over nickel 2µm up to 3µm (78µ" up to 118µ"), insertion force: Low Insertion Force = LIF (bronze) Zero Insertion Force = ZeFo (bronze)
Screwlock	Brass, 6µm up to 10µm (236µ" up to 394µ") tinned over nickel 2µm up to 3µm (78µ" up to 118µ")
Grounding	Grounding strap: brass, 4µm up to 6µm tin plating over nickel 2µm up to 3µm (78µ" up to 118µ")

Electrical Data	
Current rating	3A
Voltage rating	300V AC/rms 50Hz
Withstanding voltage	1000V AC/rms 50Hz for one minute
Insulation resistance	5000MΩ
Contact resistance	10mΩ max

Climatic Data	
Operating temperature	85°C, peak at 105°C
Damp heat	56 days (40°C - 95% HR)

Mechanical Data	
Single contact insertion force	1.2N < F < 2.5N
Single contact withdrawal force	0.4N min
LIF boardlock	8N max per connector
Coplanarity of contacts	0.2mm (.008") max

Mating and unmating force
Unit: N

No. of Cts	Mate (max)	Unmate (min)
9 (size E)	30	3.5
15 (size A)	50	4.5
25 (size B)	83	8.0

DESCRIPTION

Amphenol SMT D-Sub is offered in right angle, receptacle with brackets, as an industry standard for I / O connections.

Boardlock features:
-LIF (Low Insertion Force) boardlock especially designed to be fully compatible with pick and place machine.
-ZeFo (Zero Force Insertion) boardlock has been designed so that once placed and expanded, secures a safe locking.

Designed for Pick and Place SMT process

APPLICATIONS

- Industrial
- Telecom
- Any industry standard I / O connections

SM2 / E2

Amphenol RoHS Compliant EU 2002/95/EC

OVERALL DIMENSIONS

Shell Size Dimensions

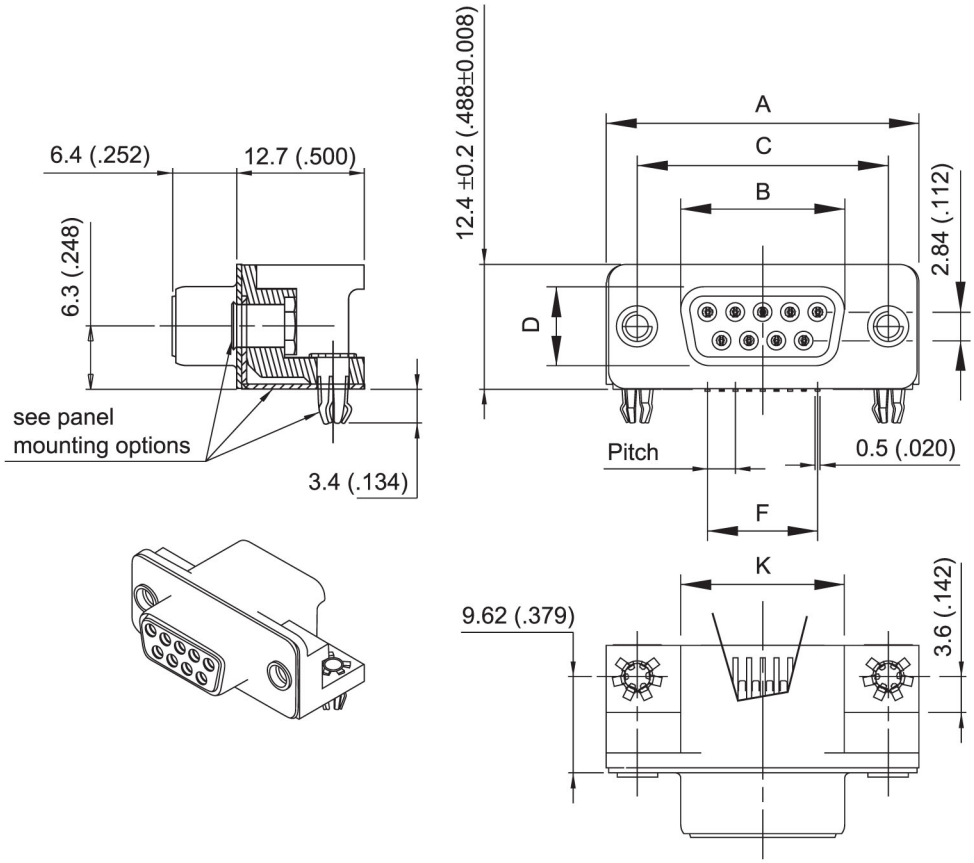

PCB LAYOUT

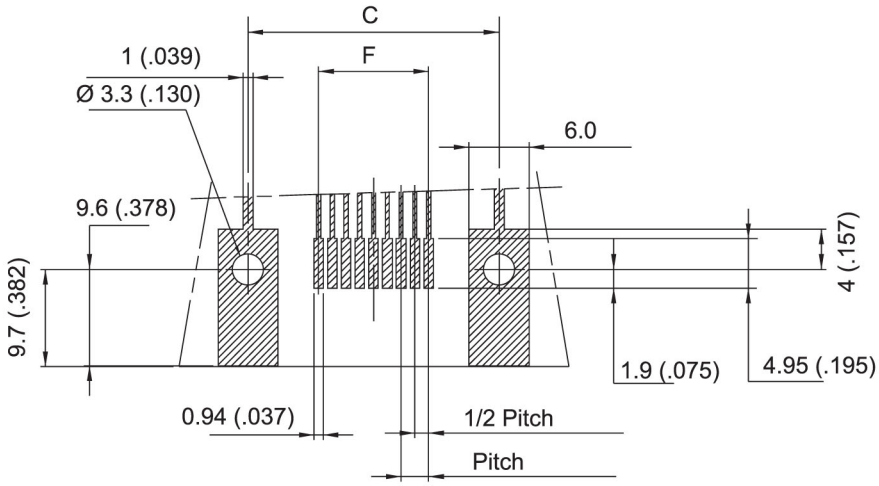

SHELL SIZE	mm (inch)						
	A +0.05 (.002) -0.1 (.004)	B 0 -0.2 (.008)	C ±0.1 (.004)	D 0 -0.25 (.01)	PITCH	F	K
E	31.15 (1.226)	16.4 (.645)	25 (.984)	8.03 (.316)	2.74 (.1078)	10.97 (.432)	16.3 (.642)
A	39.4 (1.551)	24.8 (.976)	33.3 (1.311)	8.03 (.316)	2.74 (.1078)	19.2 (.756)	24.6 (.968)
B	53.3 (2.098)	38.5 (1.515)	47 (1.850)	8.03 (.316)	2.76 (.1086)	33.12 (1.304)	38.3 (1.508)

Panel mounting option

GROUNDING TABS:

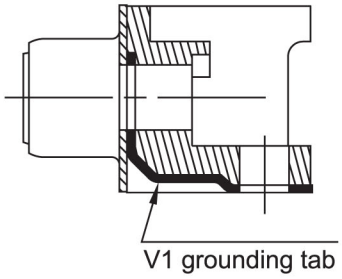

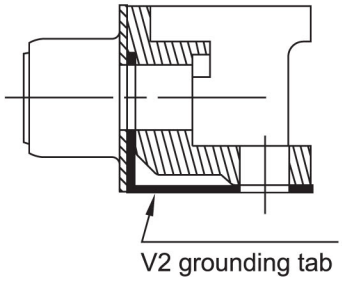

BOARDLOCKS:

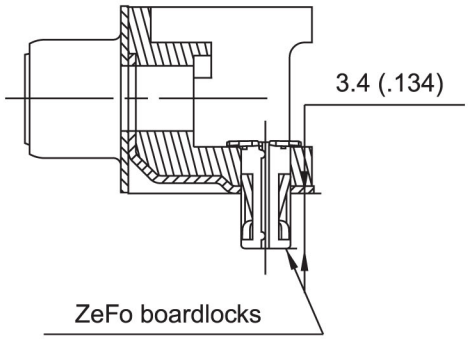

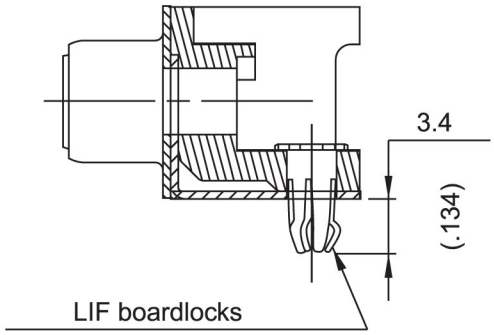

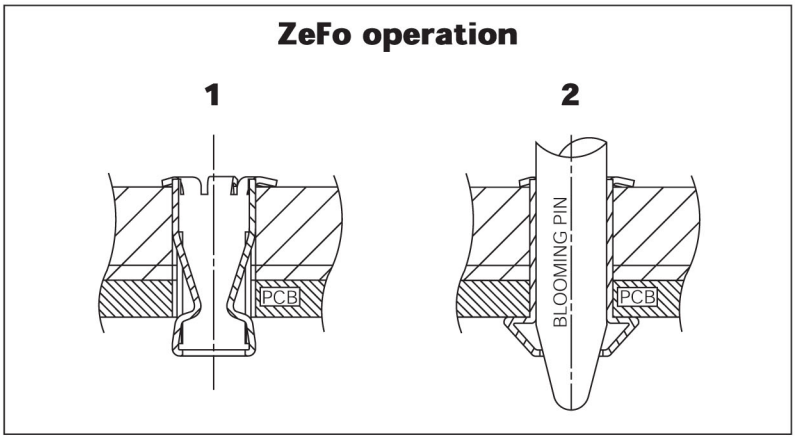

FLANGES ACCESSORIES:

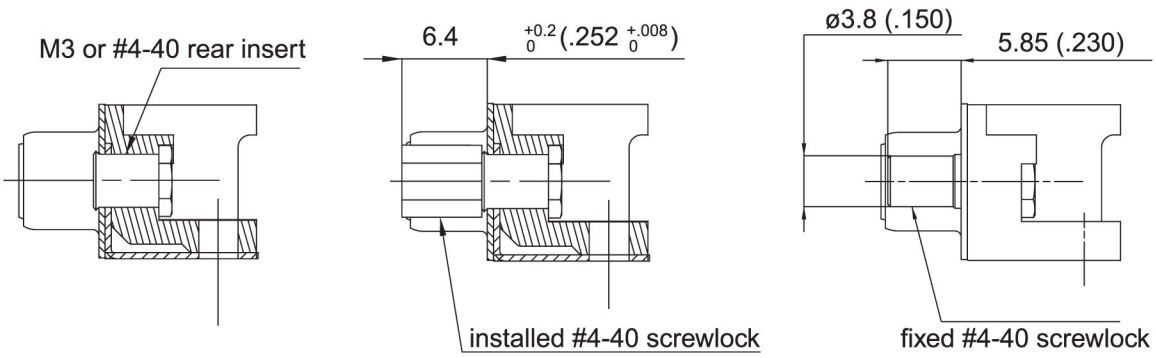

Threaded Rear	Installed Front Female	Fixed Front Female
1/2	**5**	**6**

NOTES

How to order

L 17 SM2 ... S ... ...

RoHS Compliant

configuration:
09
15
25

board locks / grounding tab:
1 = V1 grounding tab +ZeFo boardlocks (PCB = 1.6)
4 = ZeFo boardlocks only (PCB = 1.6)
7 = V1 grounding tab only
8 = no grounding tab and no boardlocks
B = V2 grounding tab + LIF boardlocks (PCB = 1.6)

packaging:
R = reel (100 / reel, 9 Pos only)
T = tube

contact plating:
1 = 0.2µm Au (7.9µ")
2 = 0.4µm Au (15.7µ")
3 = 0.5µm Au (19.7µ")
4 = 0.8µm Au (31.5µ")
6 = 1.27µm Au (50µ")

mounting options:
1 = rear insert 4-40
2 = rear insert M3
5 = installed front screwlock 4-40
6 = fixed front screwlock 4-40

: Standard options

For special request, please consult factory

Memo

Do not hesitate to contact us for further information

Amphenol
Amphenol IT & Communication Products
Block A3/A4, The 4th Industrial District of
Industrial Headquarters, Dong Keng Road
Gong Ming Town, Shen Zhen China
Fax:+86(0)755 2754 9955
Technical Support

he information given in this document are as a guideline only. We reserve the right to modify our products in any way we deem necessary. Any duplication is prohibited, unless approved in writing.

D-ST

Screw Termination D'Sub series

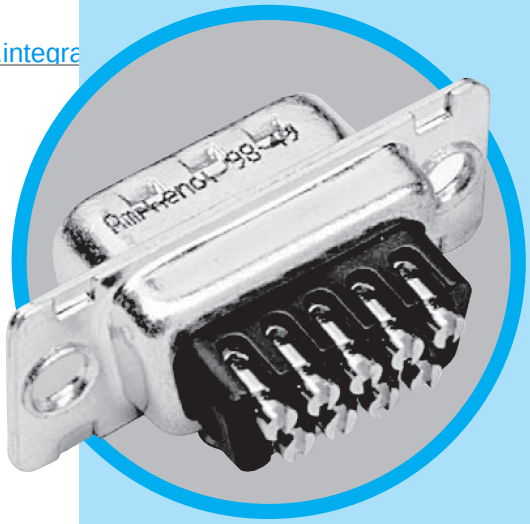

CHARACTERISTICS

• Connectors according to: MIL C24308 - NFC 93425-HE5

Materials and platings	
Shells	Steel, Tin plated
Insulator	Glass filled thermoplastic, UL 94V-0
Contacts	Machined brass for plug full gold Machined bronze for socket, full gold

Electrical Data	
Current rating	7,5 A max
Voltage rating	300 V RMS at 50 Hz
Withstanding voltage	1000 V RMS at 50 Hz
Insulation resistance	> 5000 MΩ at 500 V DC
Contact resistance	< 5 mΩ

Climatic Data	
Operating temperature	- 55°C to + 85°C, peak at 125°C
Damp heat	21 days (40°C - 95% HR)
Salt spray	48 hours

Mechanical Data	
Cable type	Solid or stranded
Cable gage	0.75 mm max (AWG 18) - For bigger wire, please consult factory
Screw torque	0.05 mN max
Mating cycles	100 (class II) or 500 (class I)

DESCRIPTION

The Amphenol Screw Termination D'Sub series is especialy designed for field applications.

These new connectors permit easy wiring without any specific tool : Just a standard electrician's screwdriver is required.

Due to their reduced overall dimensions, these connectors are compatible with all standard hoods and accessories

Simplify Your cable assemblies!

APPLICATIONS

- **Industry**
  control of speed variators,
- **Houses and public buildings**
  control of heating, air conditionning, lighting, shutters, fire safety...
- **Infrastructures**
  fluids control, motorway

D-ST / E3

Amphenol RoHS Compliant EU 2002/95/EC

OVERALL DIMENSIONS

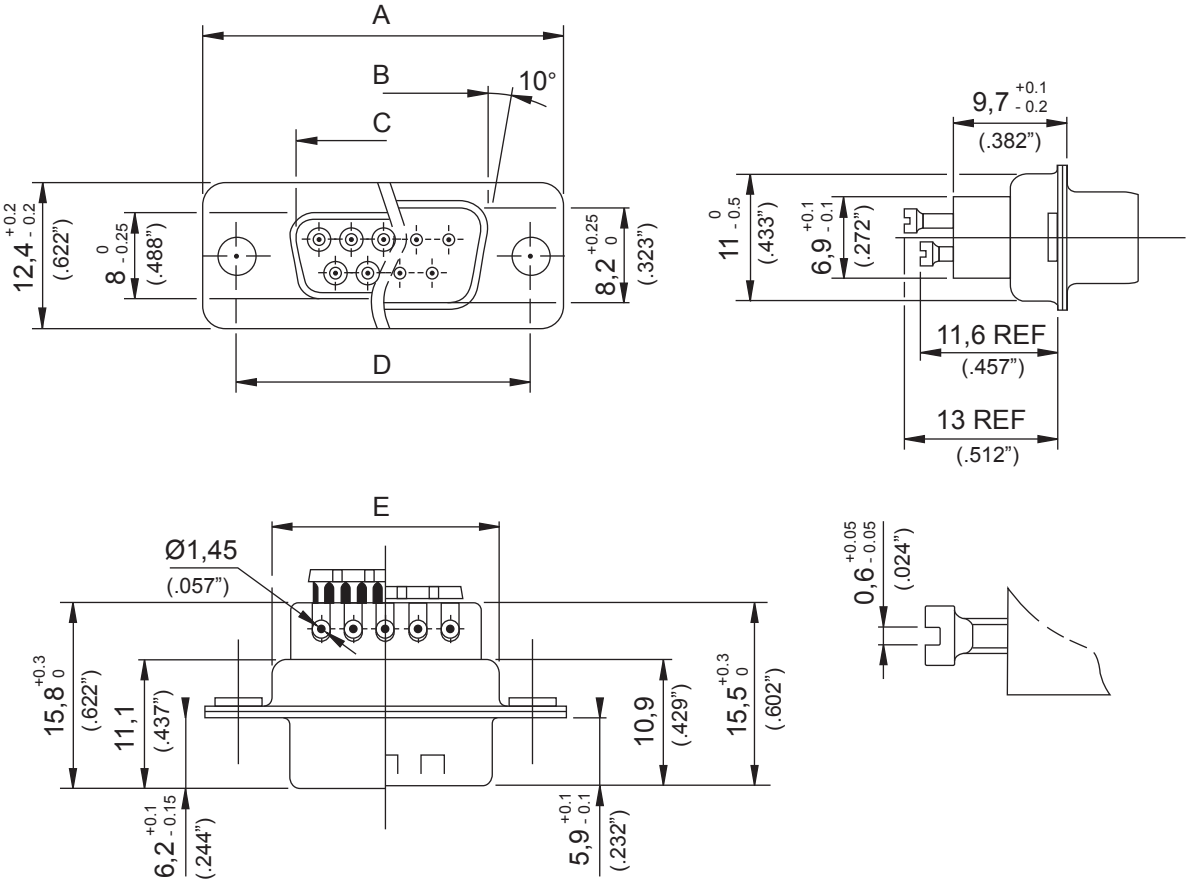

Cable stripping

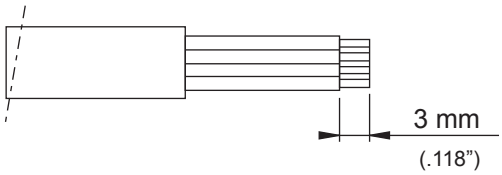

SIZE	A +0,25 (,010") -0.25 (,010")	B 0 -0,2 (,008")	C +0,2 (,008") 0	D +0.1 (,004") -0.1 (,004")	E +0.1 (,004") -0,4 (,016")
9	30.7 (1.209")	16.4 (.646")	16.8 (.661")	25 (.984")	19.4 (.370")
15	39 (1.535")	24.8 (.976")	25.1 (.988")	33.3 (1.311")	27.7 (1.091")
25	52.9 (2.083")	38.5 (1.516")	38.8 (1.528")	47 (1.850")	41.4 (1.630")
37	69.2 (2.724")	54.9 (2.161")	55.3 (2.177")	63.5 (2.500")	57.9 (2.280")

How to order

L 717D E09 P ST 1

L: RoHS Compliant

Class II:	**77D**	Female connector
	717D	Male connector, shells with dimples
Class I:	**177D**	Female connector
	777D	Male connector, shells with dimples

Size and number of contacts	**E09, A15, B25, C37**
Type of contact:	**P** = Male **S** = Female
Contact termination:	**ST** = Screw termination
Kit connector + hood option: (See following description)	**1** = **DPPK** hood **2** = **DSSK** hood **3** = **DTZK** hood **4** = **DVZK** hood

Plastic hoods

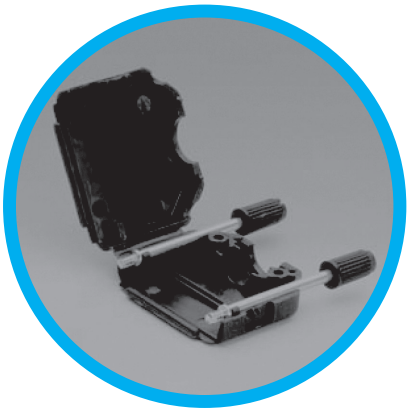

DPPK Straight cable entry

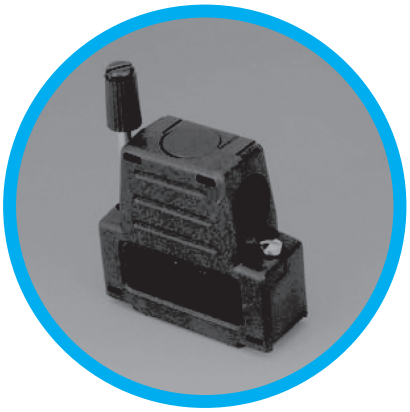

DSSK Angled cable entry

Metallic hoods

DTZK Straight cable entry

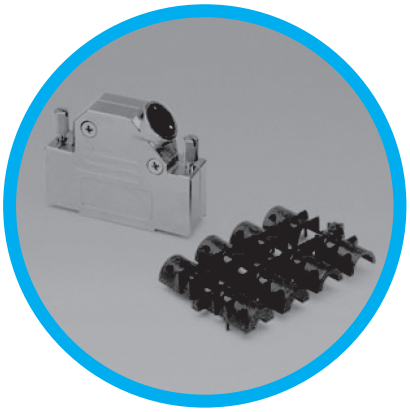

DVZK Angled cable entry

TF

D-Sub connectors - Stamped and Formed Contacts

PRESS FIT
STRAIGHT PCB TERMINATION

CHARACTERISTICS

Materials and Platings	
Shells	Steel, tin plated
Insulator	Glass-filled thermoplastic, UL 94V-0
Pin contact	Brass, selected gold in mating area; 2.54µm (100µ") min. tin on termination area over 1.27µm (50µ") min.nickel
Socket contact	Phosphor bronze, selected gold in mating area; 2.54µm (100µ") min. tin on termination area over; 1.27µm(50µ") min. nickel
Rear insert	Brass, 2.54µm (100µ") min. nickel plated
Boardlock	Brass, 2.54µm (100µ") min. nickel plated
Screwlock	Brass, 2.54µm (100µ") min. nickel plated

Electrical Data	
Current rating	3A
Voltage rating	300V AC
Withstanding voltage	1000V AC/rms 60Hz for one minute
Insulation resistance	1000MΩ
Contact resistance	25mΩ max

Climatic Data	
Operating temperature	-55°C to +125°C
Salt spray	24 hours

Mechanical Data	
Single contact insertion force	≤ 3.60 N
Single contact withdrawal force	≥ 0.2 N
Single contact insertion on board	≤ 100 N
Single contact withdrawal from board	≥ 20 N
Standard plating thickness	Gold flash 0.4µm (15µ") gold 0.76µm (30µ") gold

	Terminal Specification	Boardlock Specification
Finished Hole	1 (+0.09 -0.06)	3.1 +/- 0.05 mm
Cu	> 25 µm	Min 25 µm
Sn	< 15 µm	5-15 µm

DESCRIPTION

The Amphenol "TF" series features eye of needle formed contacts, and insulator with closed entry contacts cavities.

This series gives you Amphenol's high standards of quality and reliability to meet all your technical requirements.

Solderless straight PCB mount connectors

APPLICATIONS

- Industrial
- Telecom
- Any backplanes connections

TF / E4

Amphenol RoHS Compliant EU 2002/95/EC

OVERALL DIMENSIONS

Socket version

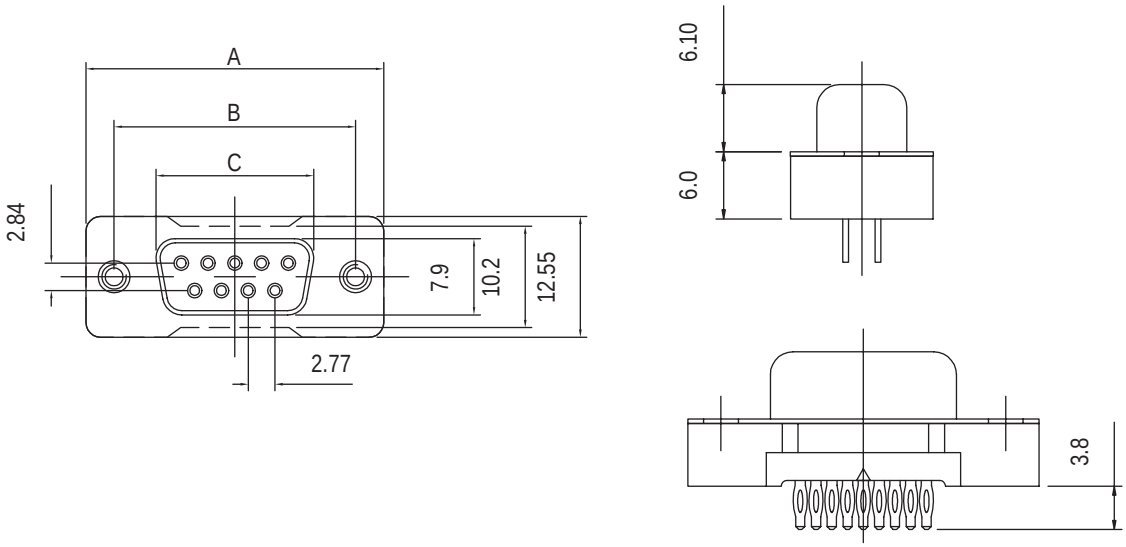

Plug version

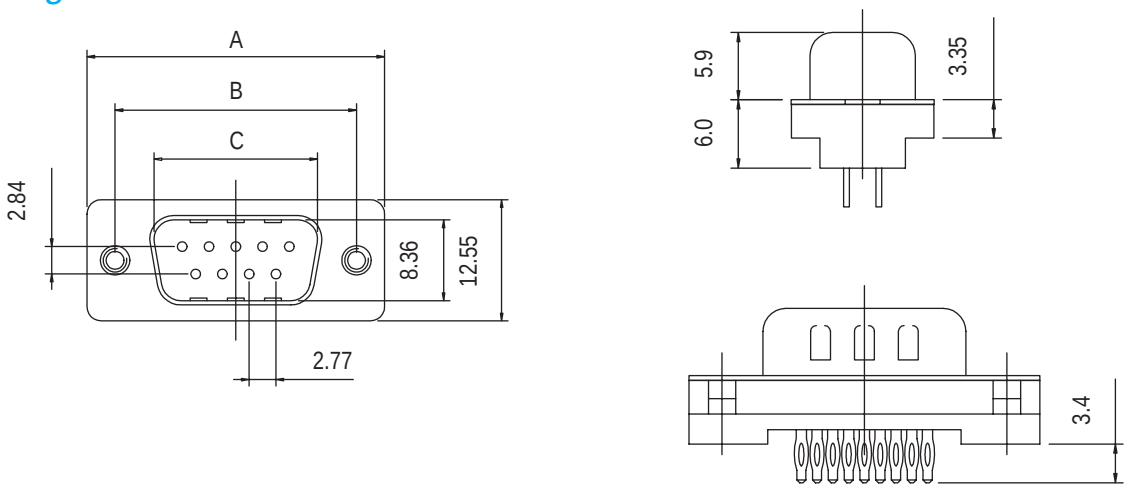

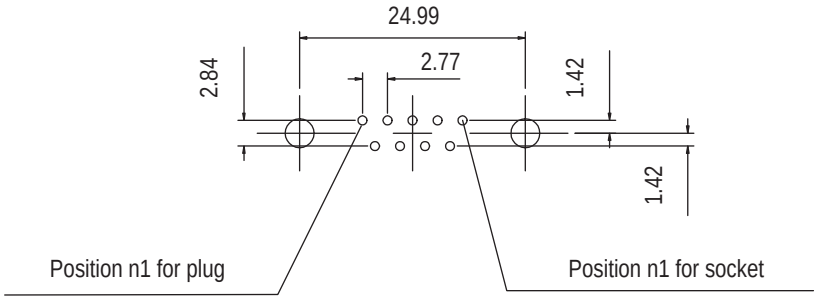

For PCB holes diameters, see on page 1 (finished holes)

Nb OF CONTACTS	DIMENSIONS mm (inch)			
	A	B	C plug	C socket
9	30.81 (1.185)	24.99 (0.984)	16.92 (0.666)	16.33 (0.643)
15	39.14 (1.54)	33.32 (1.312)	25.50 (1.004)	24.66 (0.97)
25	53.04 (2.088)	47.04 (1.852)	28.96 (1.534)	38.38 (1.511)
37	69.32 (2.729)	63.50 (2.5)	55.42 (2.182)	54.84 (2.16)

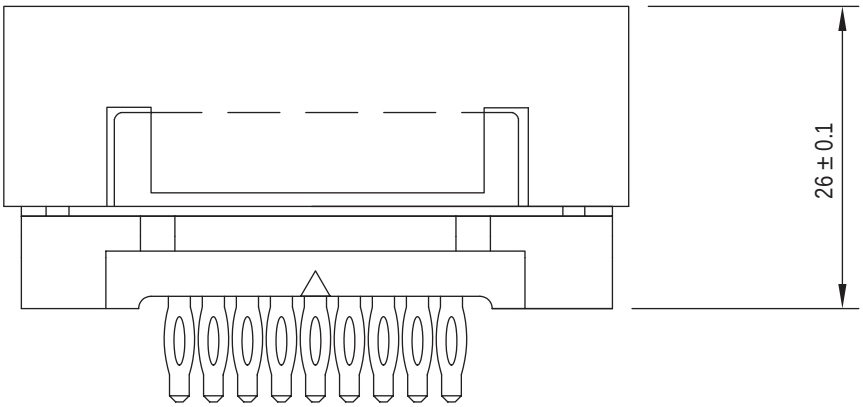

Female

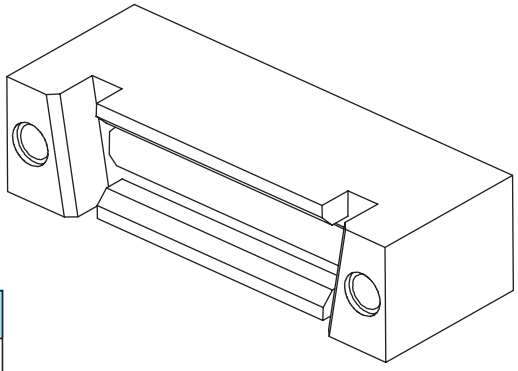

Size of connectors	Tooling PN
9	981 MC
15	982 MC
25	983 MC
37	984 MC

Male

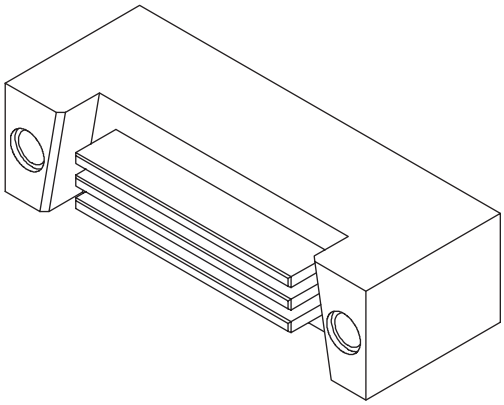

Size of connectors	Tooling PN
9	985 MC
15	986 MC
25	987 MC
37	988 MC

NOTES

Board mounting option

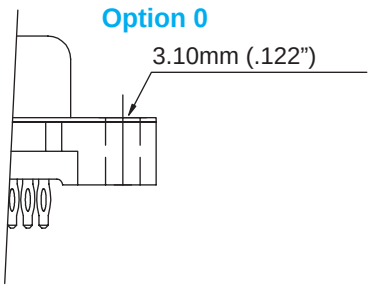

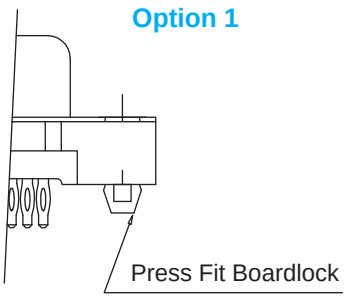

Flange mounting option

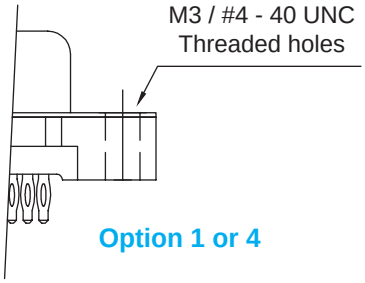

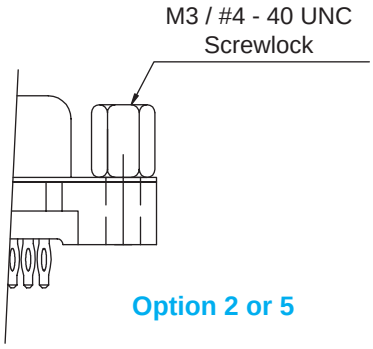

How to order

L 17TF ... ...

RoHS Compliant

Series

Number of contacts :
09-15-25-37

Contact type:
1 = pin
0 = socket

Contact plating
0 = gold flash
1 = 0.4 µm (15µ")
2 = 0.76 µm (30µ")

Flange mounting option :
1 = #4-40 threaded hole
2 = #4-40 threaded hole with #4-40 UNC screwlock installed
4 = M3 threaded hole
5 = M3 threaded hole with M3 scewlock installed

Board mounting option
0 = without boardlock
1 = with boardlock

Front shell plating
1 = tin over nickel

Do not hesitate to contact us for further information

Amphenol

Amphenol IT & Communication Products
Block A3/A4, The 4th Industrial District of
Industrial Headquarters, Dong Keng Road
Gong Ming Town, Shen Zhen China
Fax:+86(0)755 2754 9955
Technical Support

he information given in this document are as a guideline only. We reserve the right to modify our products in any way we deem necessary. Any duplication is prohibited, unless approved in writing.

SD

D'Sub connectors - Stamped and Formed Contacts

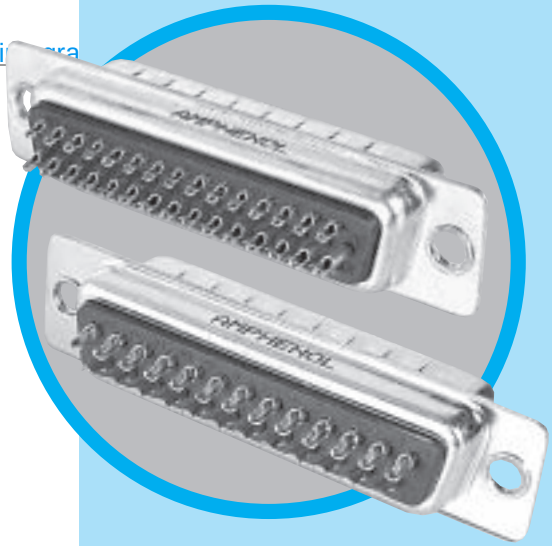

SOLDER-CUP TERMINATION STANDARD and HIGH DENSITY

CHARACTERISTICS

Specifications

• Connectors according to: MIL C24308 - NFC 93425-HE5

Materials and Platings	
Shells	Steel, tin over nickel plating
Insulator	Glass-filled thermoplastic, UL 94V-0
Pin contacts	Brass, selected gold in mating area; 2.54µm (100µ") min. tin on termination area over 1.27µm (50µ") min. nickel
Socket contact	Phosphor bronze, selected gold in mating area; 2.54µm (100µ") min. tin-on termination area over 1.27µm (50µ") min. nickel
Rear insert	Brass, 2.54µm (100µ") min. nickel plated
Screwlock	Brass, 2.54µm (100µ") min. nickel plated

Electrical Data	
Current rating	Standard Density: 5A High Density: 3A
Voltage rating	250V AC/rms 50Hz
Withstanding voltage	1000V AC/rms 50Hz for one minute
Insulation resistance	1000MΩ at 500V DC
Contact resistance	20mΩ max

Climatic Data	
Operating temperature	-55°C to +125°C
Salt spray	24 hours

Mechanical Data

Single contact insertion force 0.54kg (1.19lb) max
Single contact withdrawal force SD : 0.06kg (0.13lb) min
HD : 0.02kg (0.044lb) min

Mating and unmating force
Unit: kg (lb)

No. of Cts		SD		HD	
SD	**HD**	**Mate (max)**	**Unmate (min)**	**Mate (max)**	**Unmate (min)**
9	15	3.05 (6.74)	0.36 (0.79)	3.81 (8.42)	0.52 (1.14)
15	26	5.09 (11.24)	0.46 (1.01)	5.95 (13.16)	1.05 (2.32)
25	44	8.44 (18.66)	0.81 (1.8)	9.26 (20.46)	1.37 (3.02)
37	62	12.51 (27.65)	1.1 (2.47)	13.48 (29.78)	1.76 (3.88)
50	78	14.65 (32.38)	1.6 (3.56)	15.82 (34.96)	2.02 (4.46)

Standard plating thickness
• gold flash
• 0.4µm (15µ") gold
• 0.76 µm (30µ") gold

DESCRIPTION

The Amphenol "SD" series features precision formed contacts, and insulator with closed entry contacts cavities.

This series gives you Amphenol's high standards of quality and reliability to meet all of your commercial requirements.

Economical solder cup connectors

APPLICATIONS

• Industrial
• Telecom
• Any industry standard I / O connections

SD / E5

Amphenol RoHS Compliant EU 2002/95/EC

OVERALL DIMENSIONS

Standard Density

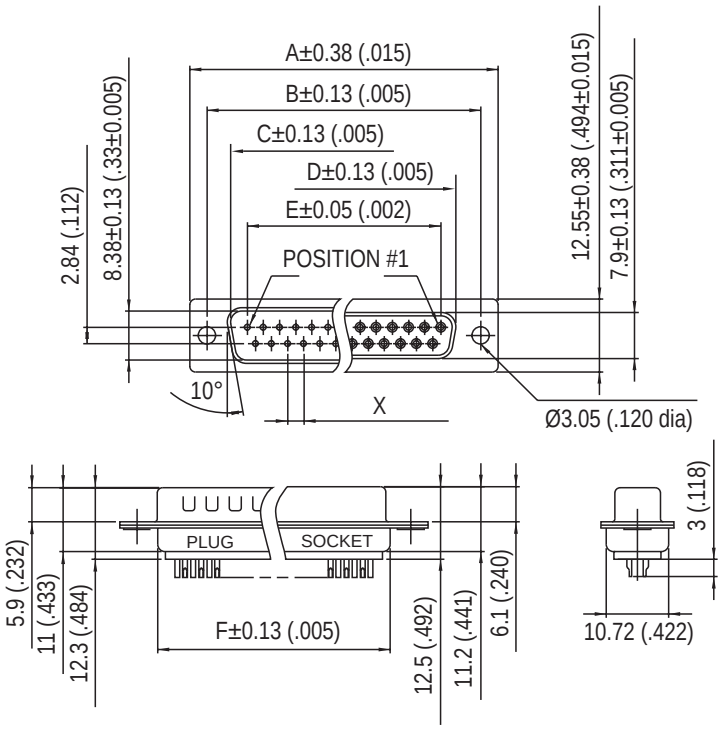

Nb OF CONTACTS	DIMENSIONS mm (inch)						
	A	B	C	D	E	F	X
9	30.84 (1.21)	24.99 (.98)	16.92 (.67)	16.24 (.64)	11.09 (.44)	19.28 (.76)	2.74
15	39.24 (1.54)	33.32 (1.31)	24.7 (.972)	24.56 (.97)	19.39 (.76)	27.51 (1.08)	2.74
25	53.04 (2.09)	47.04 (1.85)	38.96 (1.53)	38.38 (1.51)	33.24 (1.31)	41.30 (1.63)	2.77
37	69.32 (2.73)	63.50 (2.50)	55.42 (2.18)	54.76 (2.16)	49.86 (1.96)	57.71 (2.27)	2.77
50	67 (2.64)	61.11 (2.41)	52.86 (2.08)	52.34 (2.06)	44.32 (1.75)	55.3 (2.18)	2.77

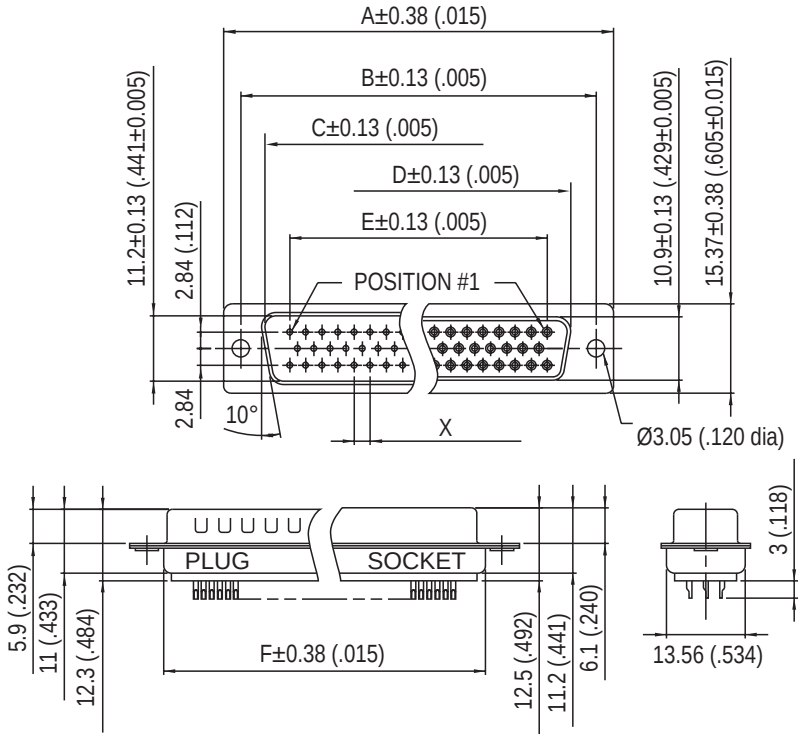

Amphenol

High Density

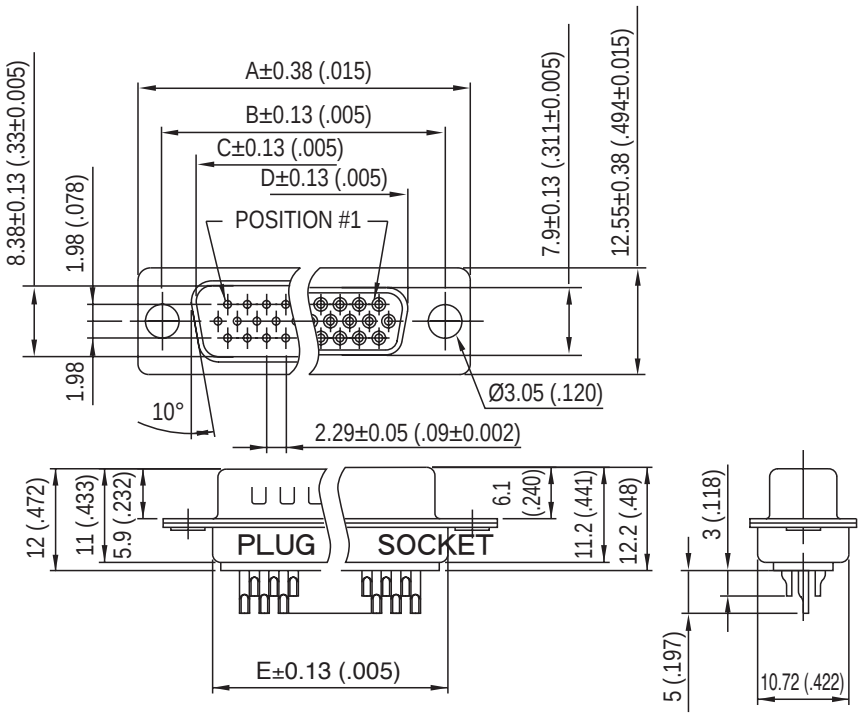

Nb OF CONTACTS	DIMENSIONS mm (inch)				
	A	B	C	D	E
15	30.84 (1.21)	24.99 (.98)	16.92 (.67)	16.24 (.64)	19.28 (.76)
26	39.24 (1.54)	33.32 (1.31)	24.7 (.972)	24.56 (.97)	27.51 (1.08)
44	53.04 (2.09)	47.04 (1.85)	38.96 (1.53)	38.38 (1.51)	41.30 (1.63)
62	69.32 (2.73)	63.50 (2.50)	55.42 (2.18)	54.76 (2.16)	57.71 (2.27)
78	67 (2.64)	61.11 (2.41)	52.86 (2.08)	52.34 (2.06)	55.3 (2.18)

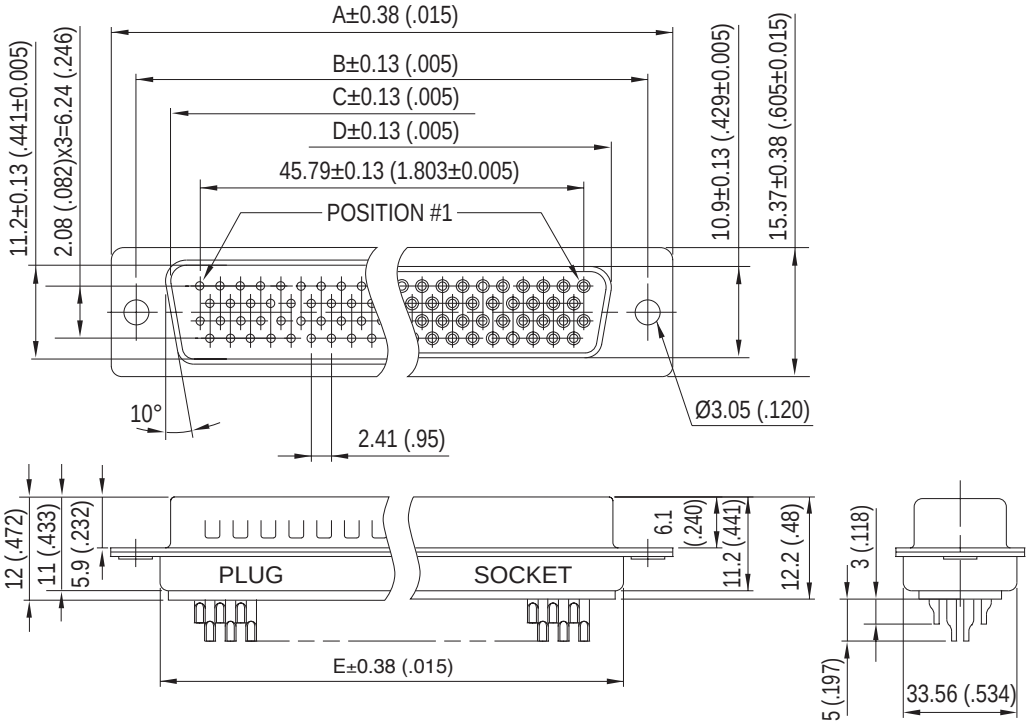

78 CONTACTS

NOTES

Panel mounting option

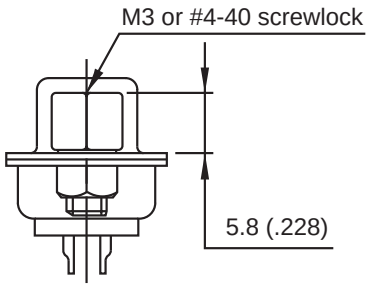

Front Female Screwlock
VF / VFM

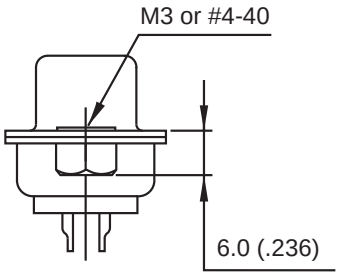

Threaded Rear Insert
H / G

How to order

L C309

RoHS Compliant

gold flash	77: tinned shell for receptable 717: tinned shell + dimples for plug
0.4µm (15µ")	177: tinned shell for receptable 777: tinned shell + dimples for plug

SD : standard density
HD : high density

shell size: E, A, B, C, D

rear mounting type:
H = rear insert 4-40
G = rear insert M3

plating option:
valid only for
0.76µm (30µ")

part numbers to be written as follow:

or 77.....C309
717.....C309

front mounting type:
no digit = standard rivet 3.05mm
VF = front screwlock 4-40
VFM = front screwlock M3

contact type:
P = pin
S = socket

configuration:
SD : 9,15,25,37,50
HD : 15,26,44,62,78

For special request, please consult factory

Do not hesitate to contact us for further information

Amphenol

Amphenol IT & Communication Products
Block A3/A4, The 4th Industrial District of
Industrial Headquarters, Dong Keng Road
Gong Ming Town, Shen Zhen China
Fax:+86(0)755 2754 9955
Technical Support

he information given in this document are as a guideline only. We reserve the right to modify our products in any way we deem necessary. Any duplication is prohibited, unless approved in writing.

SD

D'Sub connectors - Stamped and Formed Contacts

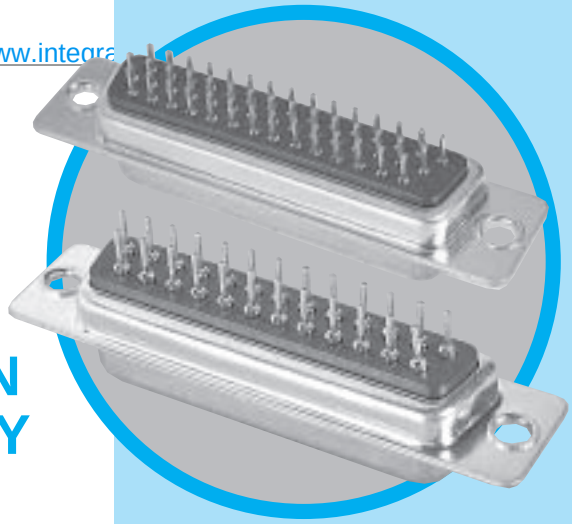

STRAIGHT PCB TERMINATION STANDARD and HIGH DENSITY

CHARACTERISTICS

Specifications

• Connectors according to: MIL C24308 - NFC 93425-HE5

Materials and Platings	
Shells	Steel, tin over nickel plating
Insulator	Glass-filled thermoplastic, UL 94V- 0
Pin contacts	Brass, selected gold in mating area; 2.54µm (100 µ") min.tin on termination area over 1.27µm (50µ") min.nickel
Socket contact	Phosphor bronze, selected gold in mating area;2.54µ(100µ") min.tin on termination area over 1.27µm (50µ") min.nickel
Rear insert	Brass, 2.54µm (100µ") min.nickel plated
Boardlock	Brass, 2.54µm (100µ") min.nickel plated
Screwlock	Brass, 2.54µm (100µ") min.nickel plated (removable)

Electrical Data	
Current rating	Standard Density:5A High Density:3A
Voltage rating	250V AC/ rms 50Hz
Withstanding voltage	1000V AC/rms 50Hz for one minute
Insulation resistance	1000MΩ at 500V DC
Contact resistance	20mΩ max

Climatic Data	
Operating temperature	-55°C to +125°C
Salt spray	24 hours

Mechanical Data

Single contact insertion force 0.54kg (1.19lb) max
Single contact withdrawal force SD : 0.06kg (0.13lb) min
HD : 0.02kg (0.044lb) min

Mating and unmating force
Unit: kg (lb)

No. of Cts		SD		HD	
SD	HD	Mate (max)	Unmate (min)	Mate (max)	Unmate (min)
9	15	3.05 (6.74)	0.36 (0.79)	3.81 (8.42)	0.52 (1.14)
15	26	5.09 (11.24)	0.46 (1.01)	5.95 (13.16)	1.05 (2.32)
25	44	8.44 (18.66)	0.81 (1.8)	9.26 (20.46)	1.37 (3.02)
37	62	12.51 (27.65)	1.1 (2.47)	13.48 (29.78)	1.76 (3.88)
50	78	14.65 (32.38)	1.6 (3.56)	15.82 (34.96)	2.02 (4.46)

Standard plating thickness
• gold flash
• 0.381µm (15µ") gold
• 0.76 µm (30µ") gold

DESCRIPTION

The Amphenol "SD" series features precision formed contacts, and insulator with closed entry contacts cavities. This series gives you Amphenol's high standards of quality and reliability to meet all of your commercial requirements.

Economical straight PCB mount connectors

APPLICATIONS

- Industrial
- Telecom
- Any industry standard I / O connections

SD / E6

Amphenol RoHS Compliant EU 2002/95/EC

OVERALL DIMENSIONS

Standard Density

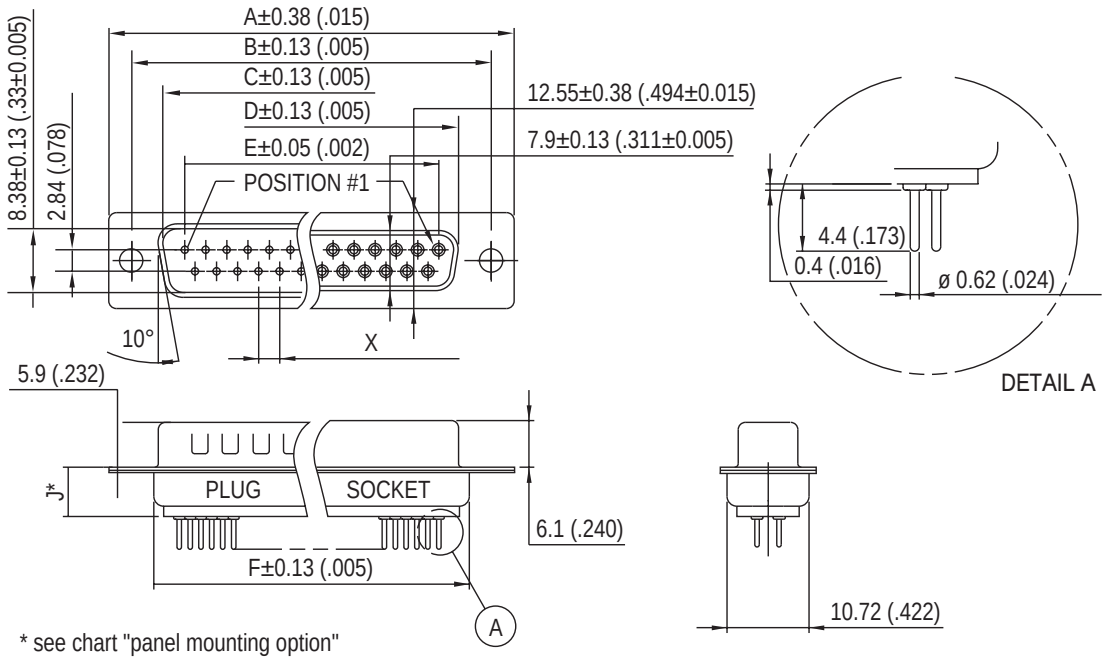

* see chart "panel mounting option"

Nb OF CONTACTS	DIMENSIONS mm (inch)						
	A	B	C	D	E	F	X
9	30.84 (1.21)	24.99 (.98)	16.92 (.67)	16.24 (.64)	11.09 (.44)	19.28 (.76)	2.74
15	39.24 (1.54)	33.32 (1.31)	24.7 (.972)	24.56 (.97)	19.39 (.76)	27.51 (1.08)	2.74
25	53.04 (2.09)	47.04 (1.85)	38.96 (1.53)	38.38 (1.51)	33.24 (1.31)	41.30 (1.63)	2.77
37	69.32 (2.73)	63.50 (2.50)	55.42 (2.18)	54.76 (2.16)	49.86 (1.96)	57.71 (2.27)	2.77
50	67 (2.64)	61.11 (2.41)	52.86 (2.08)	52.34 (2.06)	44.32 (1.75)	55.3 (2.18)	2.77

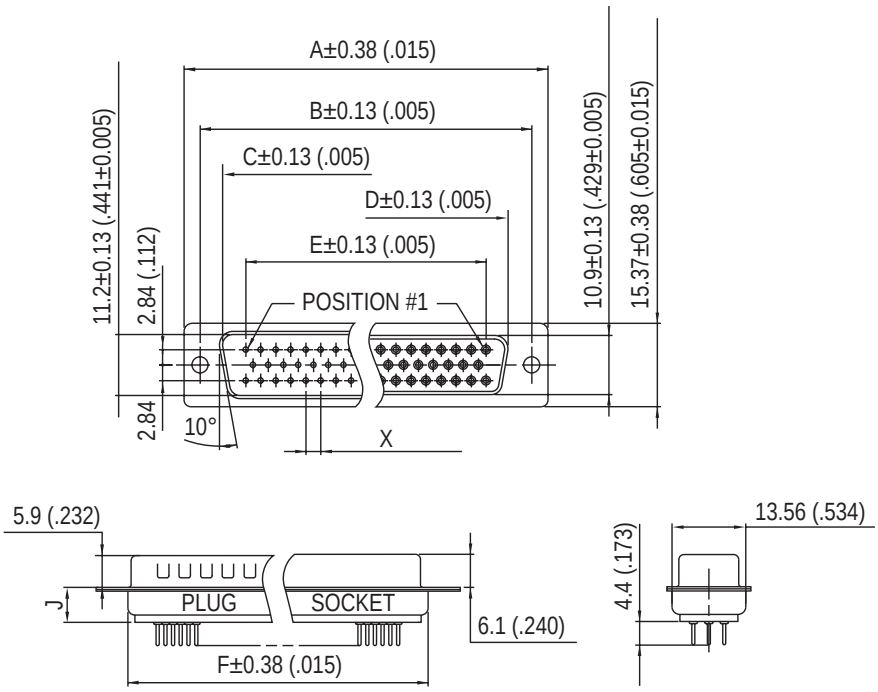

50 CONTACTS

Amphenol

High Density

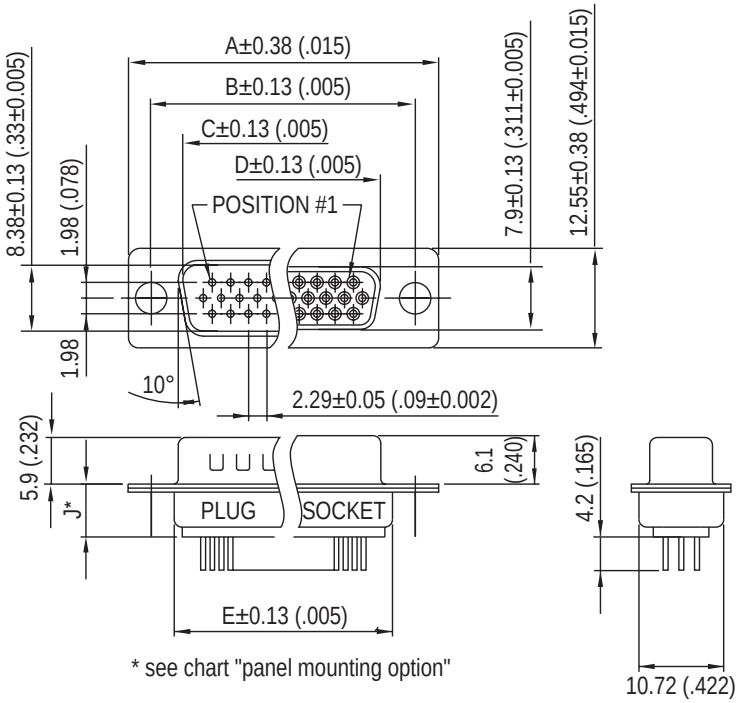

Nb OF CONTACTS	DIMENSIONS mm (inch)				
	A	B	C	D	E
15	30.84 (1.21)	24.99 (.98)	16.92 (.67)	16.24 (.64)	19.28 (.76)
26	39.24 (1.54)	33.32 (1.31)	24.7 (.972)	24.56 (.97)	27.51 (1.08)
44	53.04 (2.09)	47.04 (1.85)	38.96 (1.53)	38.38 (1.51)	41.30 (1.63)
62	69.32 (2.73)	63.50 (2.50)	55.42 (2.18)	54.76 (2.16)	57.71 (2.27)
78	67 (2.64)	61.11 (2.41)	52.86 (2.08)	52.34 (2.06)	55.3 (2.18)

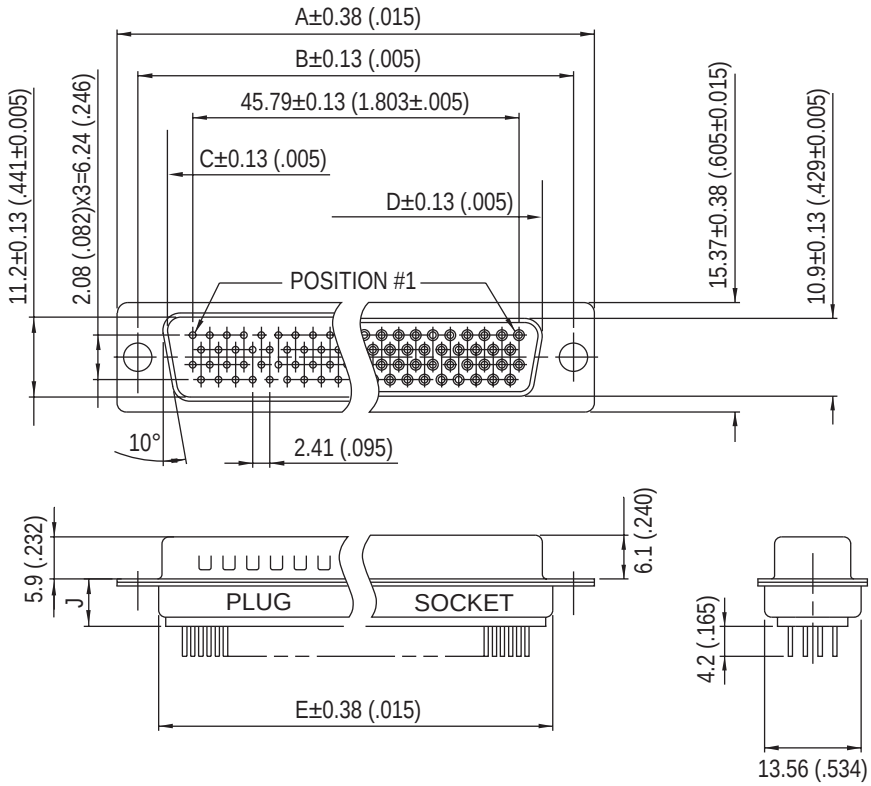

78 CONTACTS

HOW TO ORDER

Panel mounting option

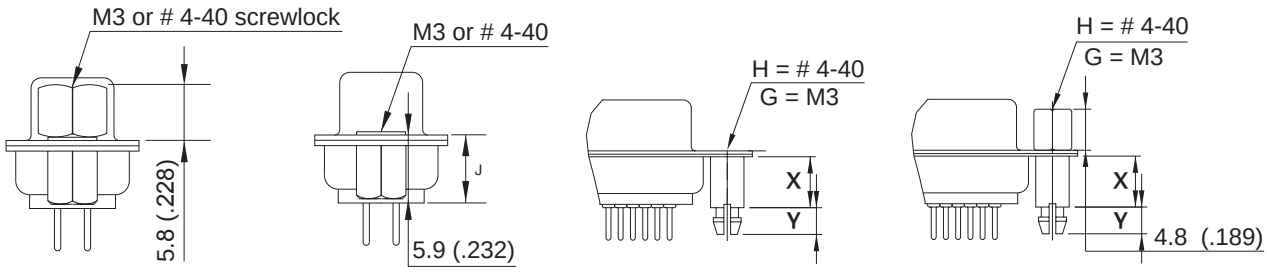

Front Female Screwlock | Threaded Rear Insert | RM5 Standoff Boardlock | RM8 Standoff Boardlock

	RM5 RM8	RM5G RM8G
X	6.0(.236)	12.7(.500)
Y	4.2(.165)	3.2(.126)
J	6.2(.244)	10.1(.397)

How to order

L ... ... OL2 ... C309

RoHS Compliant

gold flash	77: tinned shell for receptable 717: tinned shell + dimples for plug
0.4µm (15µ")	177: tinned shell for receptable 777: tinned shell + dimples for plug

SD : standard density
HD : high density

shell size: E, A, B, C, D

mounting type:
H = rear insert 4-40
G = rear insert M3
H,G must also be used to specify the threading of RM5 or RM8 grounding tabs.

plating option: valid only for 0.76µm (30µ")
part numbers to be written as follow:
77.....C309
or 717.....C309

grounding tabs:
no digit = standard rivet 3.05mm
RM5 = retention clip
RM8 = retention clip + front screwlock

Termination
Straight for PCB

contact type:
P = pin
S = socket

configuration:
SD : 9,15,25,37,50
HD : 15,26,44,62,78

For special request, please consult factory

Do not hesitate to contact us for further information

Amphenol
Amphenol IT & Communication Products
Block A3/A4, The 4th Industrial District of
Industrial Headquarters, Dong Keng Road
Gong Ming Town, Shen Zhen China
Fax:+86(0)755 2754 9955
Technical Support

he information given in this document are as a guideline only. We reserve the right to modify our products in any way we deem necessary. Any duplication is prohibited, unless approved in writing.

SD

D'Sub connectors - Stamped and Formed Contacts

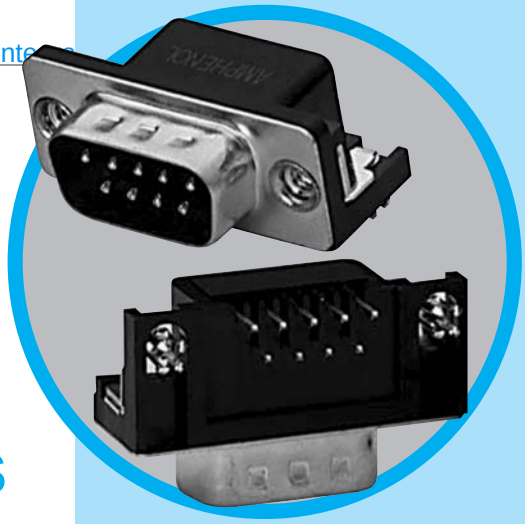

RIGHT ANGLE BOARD MOUNT CONNECTORS

MAIN CHARACTERISTICS

Specifications

• Connectors according to: MIL C24308 - NFC 93425-HE5

Materials and Platings	
Shells	Steel, tin over nickel plating
Insulator	Glass-filled thermoplastic, UL 94V- 0
Pin contacts	Brass, selected gold in mating area; 2.54µm (100 µ") min.tin on termination area over 1.27µm (50µ") min.nickel
Socket contact	Phosphor bronze, selected gold in mating area;2.54µ(100µ") min.tin on termination area over 1.27µm (50µ") min.nickel
Rear insert	Brass, 2.54µm (100µ") min.nickel plated
Boardlock	Phosphor bronze or Brass, 2.54µm (100µ") min.nickel plated
Screwlock	Brass, 2.54µm (100µ") min.nickel plated

Electrical Data	
Current rating	5A
Voltage rating	250V AC/ rms 50Hz
Withstanding voltage	1000V AC/rms 50Hz for one minute
Insulation resistance	1000MΩ at 500V DC
Contact resistance	15mΩ max

Climatic Data	
Operating temperature	-55°C to +125°C
Salt spray	24 hours

Mechanical Data

Single contact insertion force 0.54kg (1.19lb) max
Single contact withdrawal force 0.06kg (0.13lb) min

Mating and unmating force
Unit: kg (lb)

	A4 Style		1A Style	
No. of Cts	**Mate (max)**	**Unmate (min)**	**Mate (max)**	**Unmate (min)**
9	3.05 (6.74)	0.36 (0.79)	4.6 (10.17)	0.4 (0.88)
15	5.09 (11.24)	0.46 (1.01)	7.7 (17.02)	0.5 (1.10)
25	8.44 (18.66)	0.81 (1.8)	12.7 (28.07)	0.8 (1.77)
37	12.51 (27.65)	1.1 (2.47)	17.7 (39.12)	1.2 (2.65)

Standard plating thickness
• gold flash
• 0.381µm (15µ") gold
• 0.76 µm (30µ") gold

DESCRIPTION

The Amphenol "SD" series features precision formed contacts and boardlocks.

This series gives you Amphenol's high standards of quality and reliability to meet all of your commercial requirements.

Economical right angle PCB mount connectors

APPLICATIONS

• Industrial
• Telecom
• Any industry standard I / O connections

SD / E7

Amphenol RoHS Compliant EU 2002/95/EC

OVERALL DIMENSIONS

A4 style (MIL Footprint)

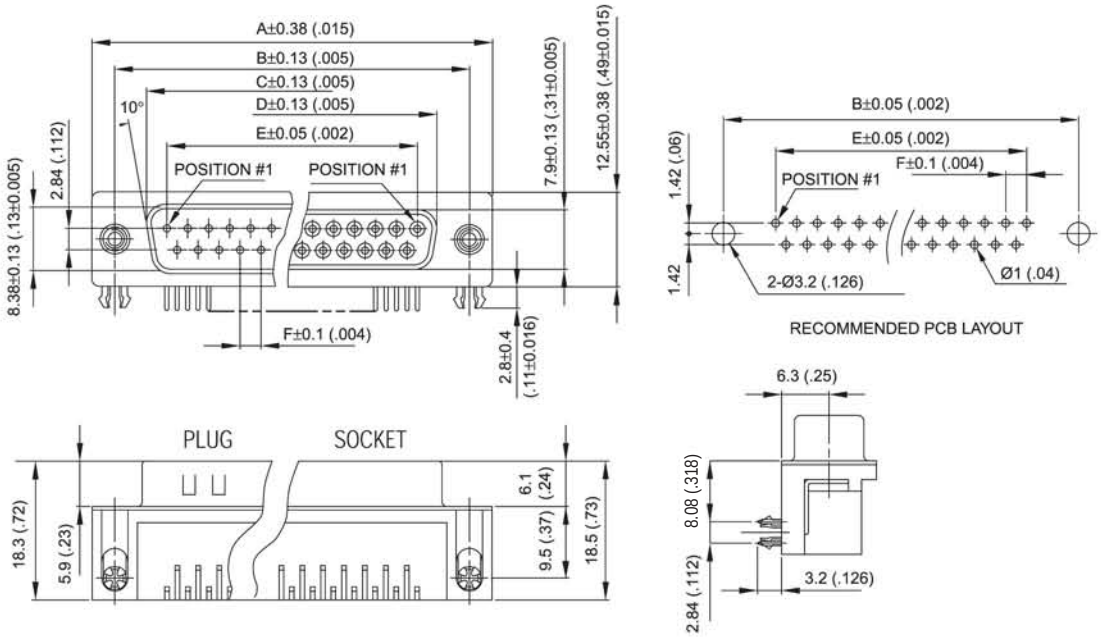

Nb OF CONTACTS	DIMENSIONS mm (inch)					
	A	B	C	D	E	F
9	30.84 (1.21)	24.99 (.98)	16.92 (.67)	16.24 (.64)	11.09 (.44)	2.74 (.108)
15	39.14 (1.54)	33.32 (1.31)	25.25 (.99)	24.56 (.97)	19.39 (.76)	2.74 (.108)
25	53.04 (2.09)	47.04 (1.85)	38.96 (1.53)	38.38 (1.51)	33.24 (1.31)	2.77 (.109)
37	69.32 (2.73)	63.50 (2.50)	55.42 (2.18)	54.76 (2.16)	49.86 (1.96)	2.77 (.109)

1A style (European Footprint)

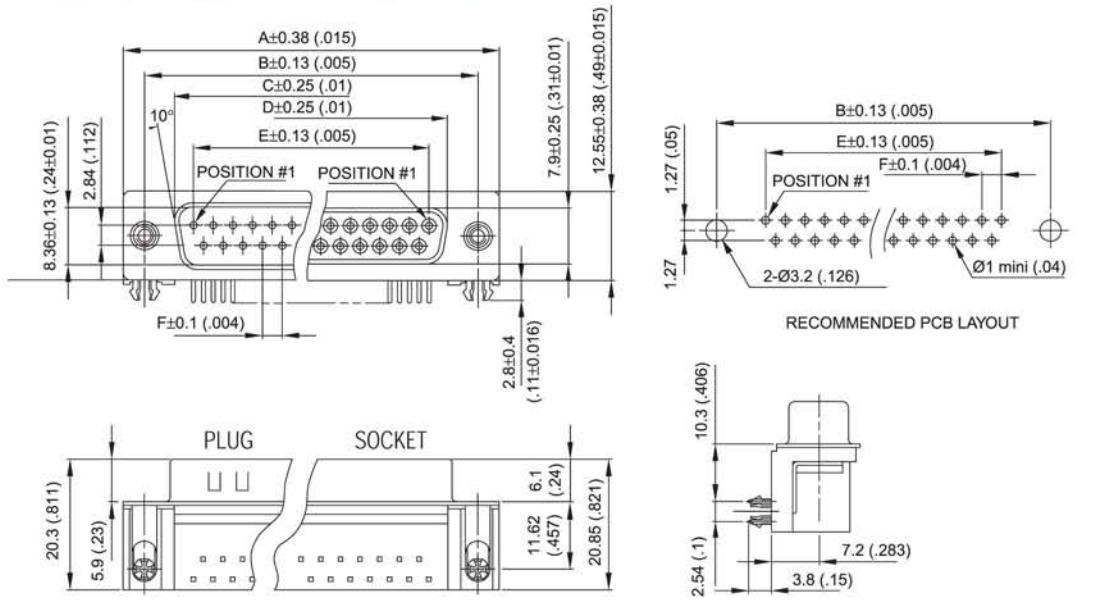

Nb OF CONTACTS	DIMENSIONS mm (inch)					
	A	B	C	D	E	F
9	30.84 (1.21)	24.99 (.98)	16.92 (.67)	16.24 (.64)	11.96 (.43)	2.74 (.108)
15	39.1 (1.54)	33.32 (1.31)	25.25 (.99)	24.66 (.97)	19.18 (.755)	2.74 (.108)
25	53.09 (2.09)	47.04 (1.85)	38.96 (1.53)	38.38 (1.51)	33.24 (1.31)	2.77 (.109)
37	69.4 (2.73)	63.50 (2.50)	55.42 (2.18)	54.84 (2.16)	49.86 (1.96)	2.77 (.109)

Amphenol

Panel mounting option

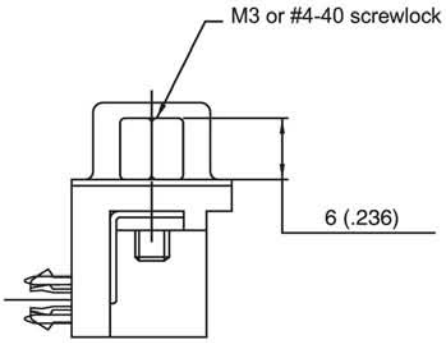

Front Female Screwlock
4F / 3F

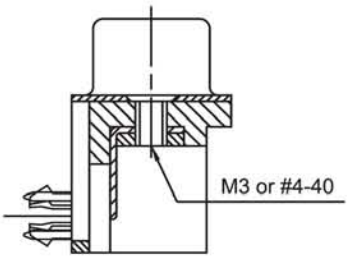

Threaded Rear Insert
4R / 3R

How to order

L ... SD ... ... CH ... C309

RoHS Compliant

gold flash	77: tinned shell for receptable 717: tinned shell + dimples for plug
0.4µm (15µ")	177: tinned shell for receptable 777: tinned shell + dimples for plug

shell size: E, A, B, C

configuration: 9, 15, 25, 37

contact type:
P = pin
S = socket

plating option:
valid only for
0.76µm (30µ")

part numbers to be written as follow:

or 77 SD.....C309
717 SD.....C309

mounting options:
4F = front screwlock 4-40
3F = front screwlock M3
4R = rear insert 4-40
3R = rear insert M3

PCB locking type:
grounding tabs
+ board locks

Footprint:
1A (European)
A4 (MIL)

For special request, please consult factory

SD

D-Sub connectors - Stamped and Formed Contacts

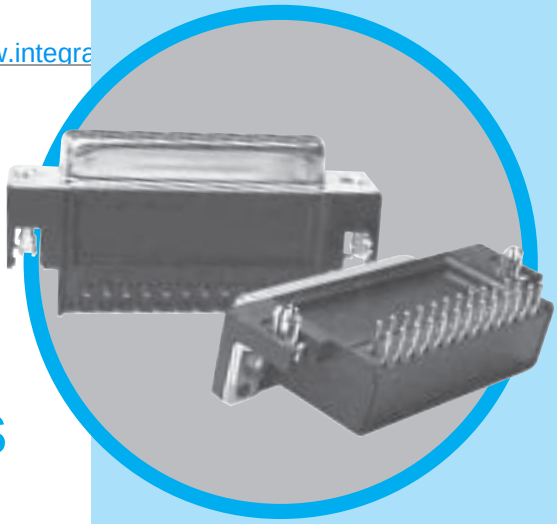

RIGHT ANGLE BOARD MOUNT CONNECTORS FOOTPRINT 14.99 mm (.590”)

CHARACTERISTICS

Specifications

- **UL File:** E119881
- Connectors according to MIL C24308

Materials and Platings	
Shells	Steel, tin over nickel plating
Insulator	Glass-filled thermoplastic, UL 94V-0
Pin contacts	Brass, selected gold in mating area; 2.54µm (100µ") min. tin on termination area over 1.27µm (50µ") min. nickel
Socket contact	Phosphor bronze, selected gold in mating area; 2.54µm (100µ") min. tin- on termination area over 1.27µm (50µ") min. nickel
Rear insert	Brass, 2.54µm (100µ") min. nickel plated
Screwlock	Brass, 2.54µm (100µ") min. nickel plated

Electrical Data	
Current rating	5A
Voltage rating	600V AC/rms 50Hz
Withstanding voltage	1000V AC/rms 50Hz for one minute
Insulation resistance	5000MΩ
Contact resistance	10mΩ max

Climatic Data	
Operating temperature	-55°C to +125°C
Salt Spray	24 hours

Mechanical Data

Mating and unmating force
Unit: kg (lb)

No. of Cts	Mate (max)	Unmate (min)
9 (size E)	3.05 (6.74)	0.36 (0.79)
15 (size A)	5.09 (11.24)	0.46 (1.01)
25 (size B)	8.44 (18.66)	0.81 (1.8)
37 (size C)	12.51 (27.65)	1.1 (2.47)

Standard plating thickness
- gold flash
- 0.4µm (15µ") gold
- 0.76 µm (30µ") gold

DESCRIPTION

The Amphenol "SD" series features precision formed contacts and boardlocks.

This series gives you Amphenol's high standards of quality and reliability to meet all of your commercial requirements.

Economical right angle PCB mount connectors

APPLICATIONS

- Industrial
- Telecom
- Any industry standard I / O connections

SD / E8

Amphenol RoHS Compliant EU 2002/95/EC

OVERALL DIMENSIONS

Shell Size Dimensions

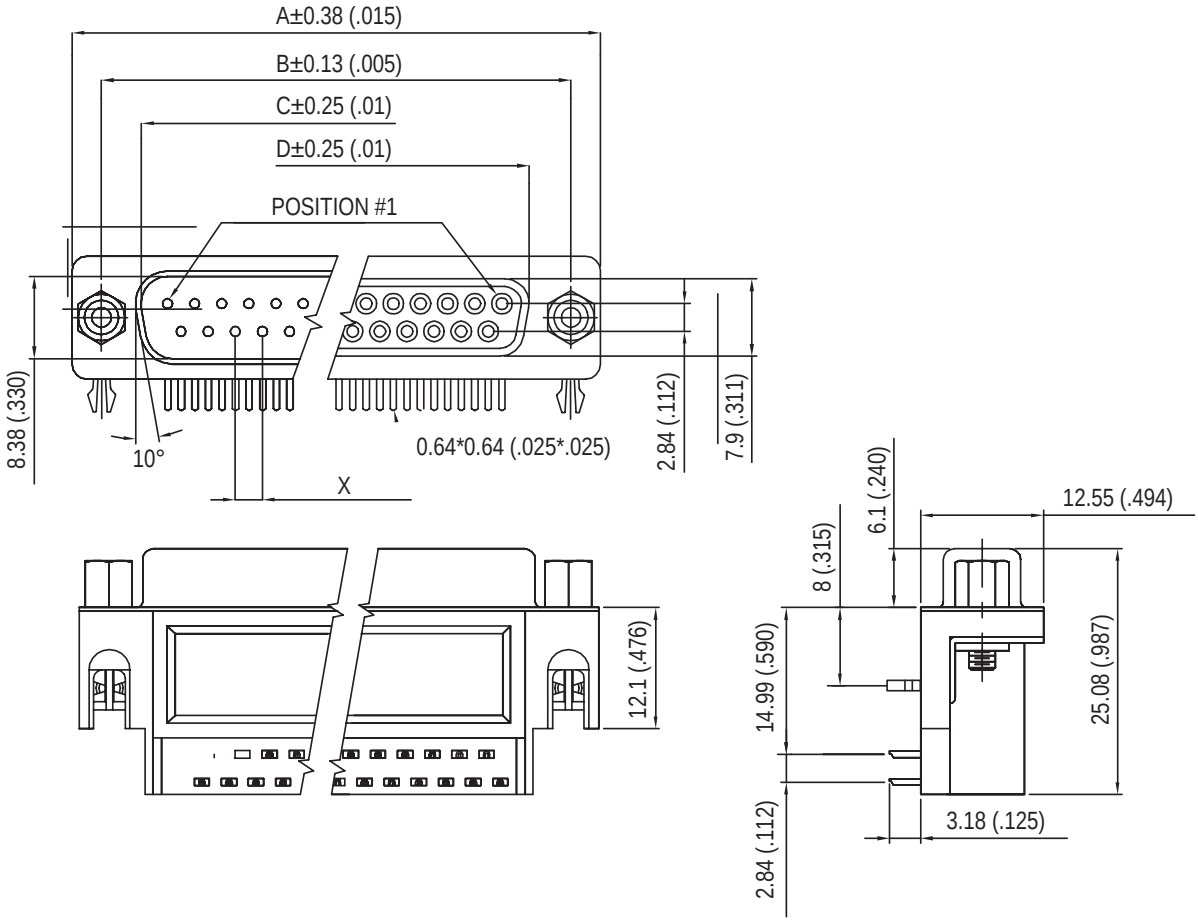

Recommended P.C.B.Layout

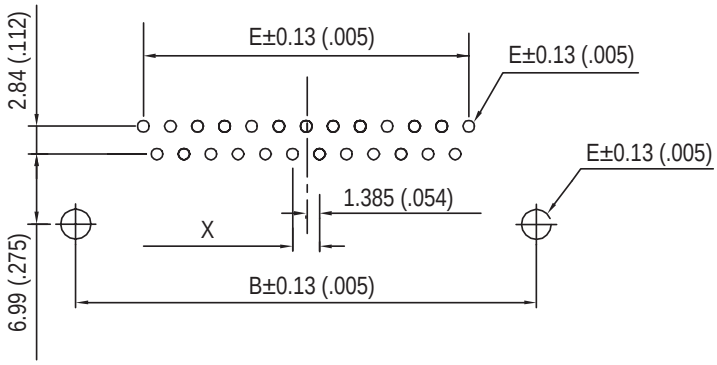

Nb OF CONTACTS	DIMENSIONS mm (inch)					
	A	B	C	D	E	X
9	30.84 (1.214)	24.99 (.984)	16.92 (.666)	16.26 (.640)	11.08 (.436)	2.74
15	39.24 (1.545)	33.32 (1.312)	25.25 (.994)	24.56 (.967)	19.39 (.763)	2.74
25	53.04 (2.088)	47.04 (1.852)	38.96 (1.534)	38.30 (1.508)	33.24 (1.309)	2.77
37	69.34 (2.730)	63.50 (2.500)	55.42 (2.182)	54.76 (2.156)	49.86 (1.963)	2.77

Panel mounting option

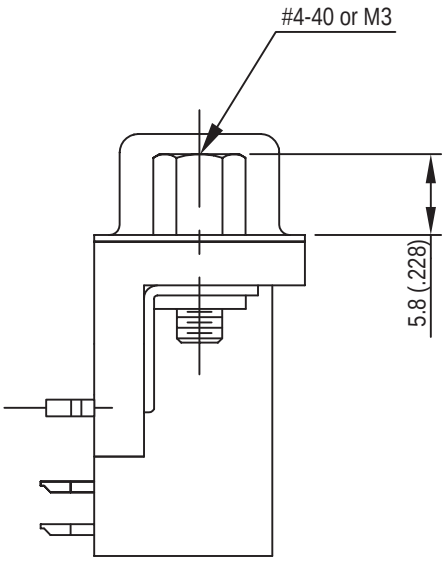

Front Female Screwlock
4F/3F

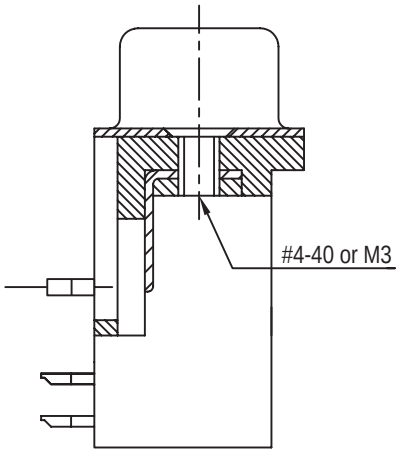

Threaded Rear Insert
4R/3R

How to order

L ... SD ... ... AB CH ... C309

RoHS Compliant

gold flash	77: tinned shell for receptable 717: tinned shell + dimples for plug
0.4µm (15µ")	177: tinned shell for receptable 777: tinned shell + dimples for plug

shell size: E, A, B, C

configuration: 09, 15, 25, 37

contact type:
P = pin
S = socket

plating option:
valid only for 0.76µm (30µ")

part numbers to be written as follow:

77SD.....C309
or
717SD.....C309

mounting options:
4F = front screwlock 4-40
3F = front screwlock M3
4R = rear insert 4-40
3R = rear insert M3

PCB locking type:
grounding tabs + boardlocks

footprint:14.99 mm (.590")

For special request, please consult factory

TS

D-Sub connectors - Stamped and Formed Contacts

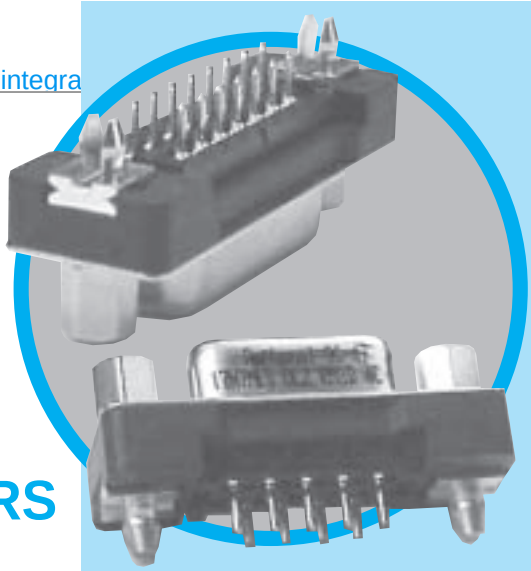

STRAIGHT PCB TERMINATION ONE METAL SHELL CONNECTORS

CHARACTERISTICS

Specifications

• Connectors according to MIL C24308

Materials and Platings	
Shells	Steel, tin over nickel plating
Insulator	Glass-filled thermoplastic, UL 94V-0
Contacts	Copper alloy, with selective gold plating
Boardlock	Brass with nickel plating
Screwlock	Brass with nickel plating

Electrical Data	
Current rating	5A
Voltage rating	600V AC/rms 50Hz
Withstanding voltage	1000V AC/rms 50Hz for one minute
Insulation resistance	5000MΩ
Contact resistance	10mΩ max

Climatic Data	
Operating temperature	-55°C to +125°C

Mechanical Data

Mating and unmating force
Unit: kg (lb)

No. of Cts	Mate (max)	Unmate (min)
9	3.05 (6.74)	0.36 (0.79)
15	5.09 (11.24)	0.46 (1.01)
25	8.44 (18.66)	0.81 (1.8)
37	12.51 (27.65)	1.1 (2.47)

Standard plating thicknesses
• gold flash
• 0.4µm (15µ") gold
• 0.76 µm (30µ") gold

DESCRIPTION

The one shell D-sub Amphenol series features, stamped and formed contacts.

This series gives you Amphenol's high standards of quality and reliability to meet all of your commercial requirements

Economical straight PCB, one shell connectors

APPLICATIONS

• Industrial
• Telecom
• Any industry standard I / O connections

TS / E10

Amphenol RoHS Compliant EU 2002/95/EC

OVERALL DIMENSIONS

Shell Size Dimensions

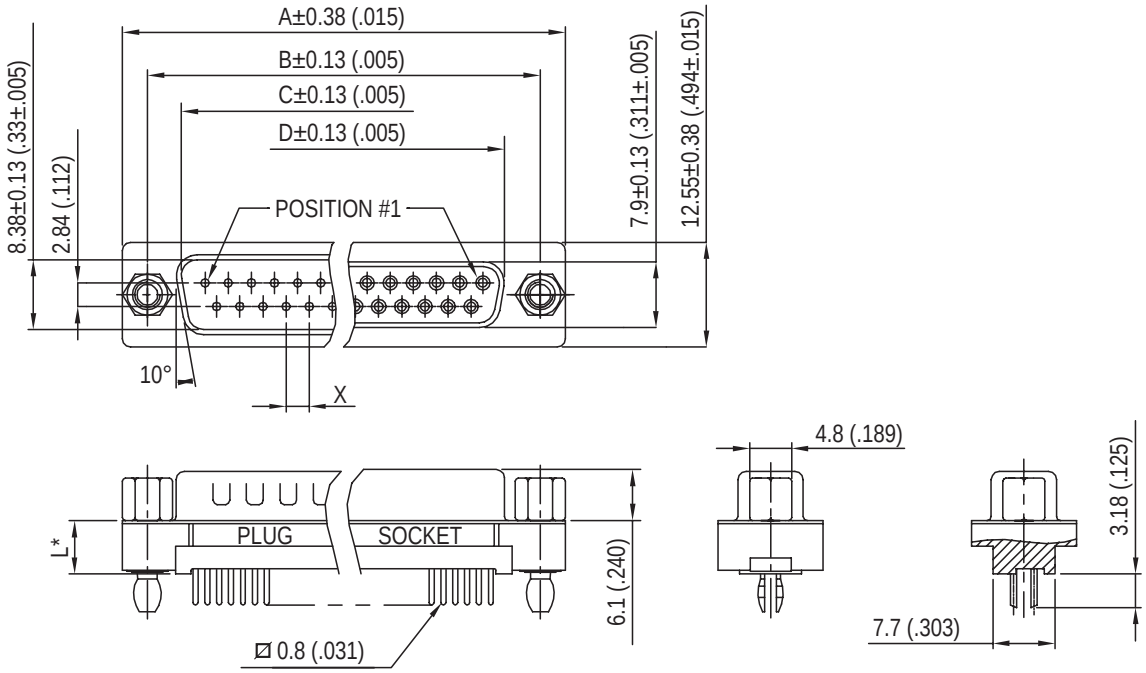

***see chart "how to order"**

RECOMMENDED P.C.B. LAYOUT

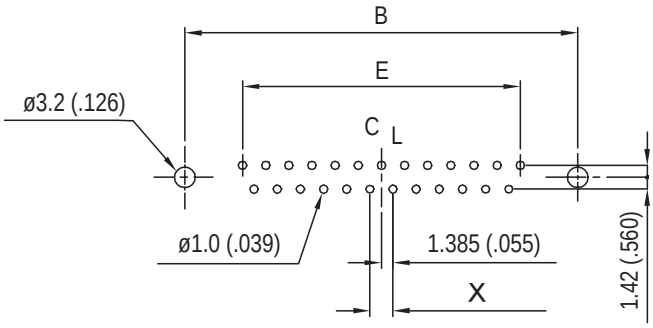

Nb OF CONTACTS	DIMENSIONS mm (inch)					
	A	B	C	D	E	X
9	30.84 (1.21)	24.99 (.984)	16.92 (.666)	16.26 (.640)	11.08 (.436)	2.74
15	39.24 (1.54)	33.32 (1.31)	25.25 (.994)	24.56 (.967)	19.39 (.763)	2.74
25	53.04 (2.09)	47.04 (1.85)	38.96 (1.53)	38.30 (1.51)	33.24 (1.31)	2.77
37	69.34 (2.73)	63.50 (2.50)	55.42 (2.18)	54.76 (2.16)	49.86 (1.96)	2.77

Panel mounting option

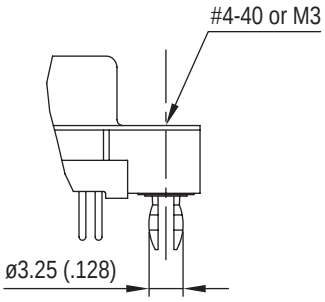

Boardlock with Threaded Insert
RM5

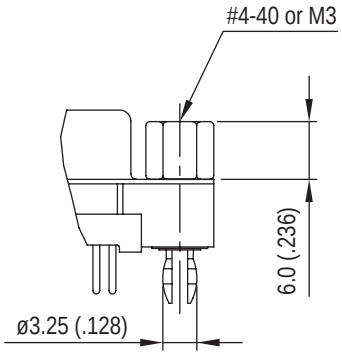

Boardlock with Front Screwlock
RM8

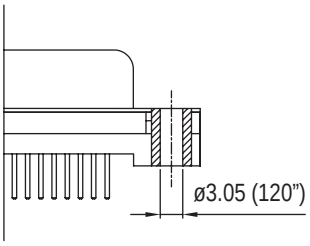

Clear Hole

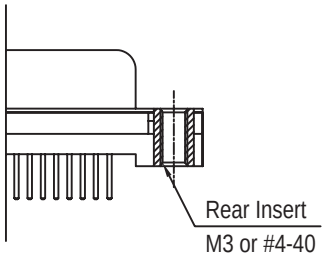

Rear Insert Threaded

How to order

L ... TS C309

RoHS Compliant

gold flash	77: tinned shell for receptable 717: tinned shell + dimples for plug
0.4µm (15µ")	177: tinned shell for receptable 777: tinned shell + dimples for plug

shell size: E, A, B, C

mounting options:
Blank = Clear Hole
G = M3
H = 4.40
H,G must also be used to specify the threading of RM5 or RM8 grounding tabs

configuration: 09, 15, 25, 37

plating option:
valid only for
0.76µm (30µ")

part numbers to be written as follow:

77.....C309
or
717.....C309

board mounting options:
Blank = Clear Hole
RM5 = retention clip
RM8 = retention clip
+front screwlock

termination:
OL2 : L = 6.02mm (.237")
OL2C : L = 11.48mm (.452")

contact type:
P = pin
S = socket

For special request, please consult factory

RR-HR

D-Sub connectors - Stamped and Formed Contacts

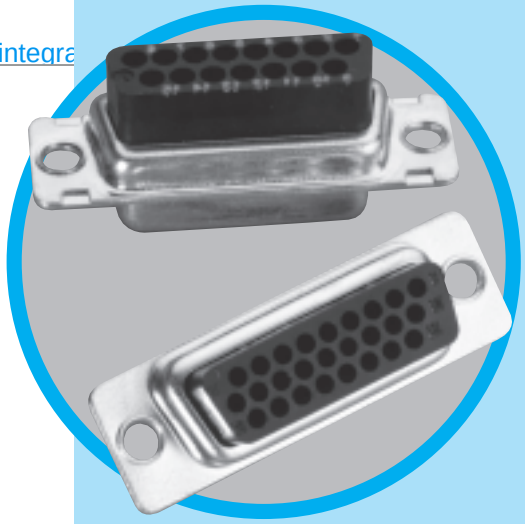

REAR RELEASE CRIMP CONNECTORS

CHARACTERISTICS

Specifications

• Connectors according to MIL C24308

Materials and Platings	
Shells	Tinned steel with or without dimples on plug connector
Insulator	Black glass-filled thermoplastic, UL 94V-0
Boardlock	Brass, 3µm to 5µm (118µ" to 197µ") tin over nickel 2µm to 3µm (78µ" to 118µ")
Screwlock	Brass, 6µm to 10µm (236µ" to 394µ") tin over nickel 2µm to 3µm (78µ" to 118µ")

Contacts	Under plating	Crimp side
0.2µm (8µ") gold	2µm (78µ") nickel	gold flash or tin
0.5µm (20µ") gold	2µm (78µ") nickel	gold flash or tin
0.76µm (30µ") gold	2µm (78µ") nickel	gold flash or tin

Electrical Data	
Current rating	5A
Voltage rating	500V AC/rms 50Hz
Withstanding voltage	**RR:** 1000V AC/rms 50Hz for 1 minute **HR:** 1000V AC/rms 60Hz for 1 minute
Insulation resistance	**RR:** 5000MΩ **HR:** 1000MΩ
Contact resistance	10mΩ max
Wire size	20-28 AWG max insulation Ø1.27mm (.05")

Climatic Data	
Operating temperature	-55°C to +125°C

Mechanical Data

Mating and unmating force
Unit: kg (lb)

No. of Cts		Mate (max)		Unmate (min)	
RR	HR	RR	HR	RR	HR
9 (size E)	15 (size E)	3.05 (6.74)	3.81 (8.42)	0.36 (0.79)	0.52 (1.14)
15 (size A)	26 (size A)	5.09 (11.24)	5.95 (13.16)	0.46 (1.01)	1.05 (2.32)
25 (size B)	44 (size B)	8.44 (18.66)	9.26 (20.46)	0.81 (1.8)	1.37 (3.02)
37 (size C)	62 (size C)	12.51 (27.65)	13.48 (29.78)	1.1 (2.47)	1.76 (3.88)
50 (size D)	78 (size D)	14.65 (32.38)	15.82 (34.96)	1.6 (3.56)	2.02 (4.46)

DESCRIPTION

Designed for high volume production, Amphenol's rear release crimp connector and contacts provide significant cost saving.

- EMI / RFI shell configuration.
- Removable, reusable contacts.
- Automatic and manual tooling available.

Simplify your cable assemblies

APPLICATIONS

- Commercial
- Industrial
- Telecom
- Any industry standard I / O connections

RR-HR / E11

Amphenol RoHS Compliant EU 2002/95/EC

OVERALL DIMENSIONS

Standard density RR

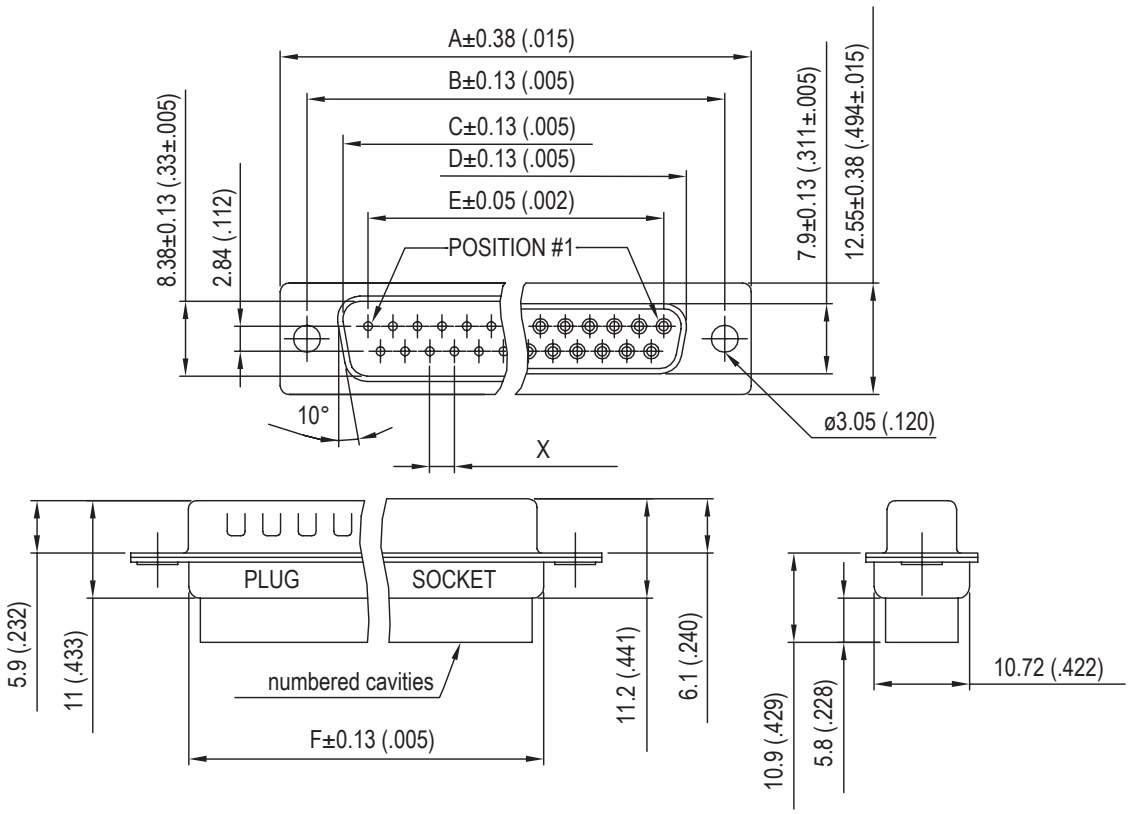

Nb OF CONTACTS	DIMENSIONS mm (inch)						
	A	B	C	D	E	F	X
9	30.84 (1.21)	24.99 (.98)	16.92 (.67)	16.24 (.64)	11.09 (.44)	19.28 (.76)	2.74
15	39.24 (1.54)	33.32 (1.31)	24.7 (.972)	24.56 (.97)	19.39 (.76)	27.51 (1.08)	2.74
25	53.04 (2.09)	47.04 (1.85)	38.96 (1.53)	38.38 (1.51)	33.24 (1.31)	41.30 (1.63)	2.77
37	69.32 (2.73)	63.50 (2.50)	55.42 (2.18)	54.76 (2.16)	49.86 (1.96)	57.71 (2.27)	2.77
50	67 (2.64)	61.11 (2.41)	52.86 (2.08)	52.34 (2.06)	44.32 (1.75)	55.3 (2.18)	2.77

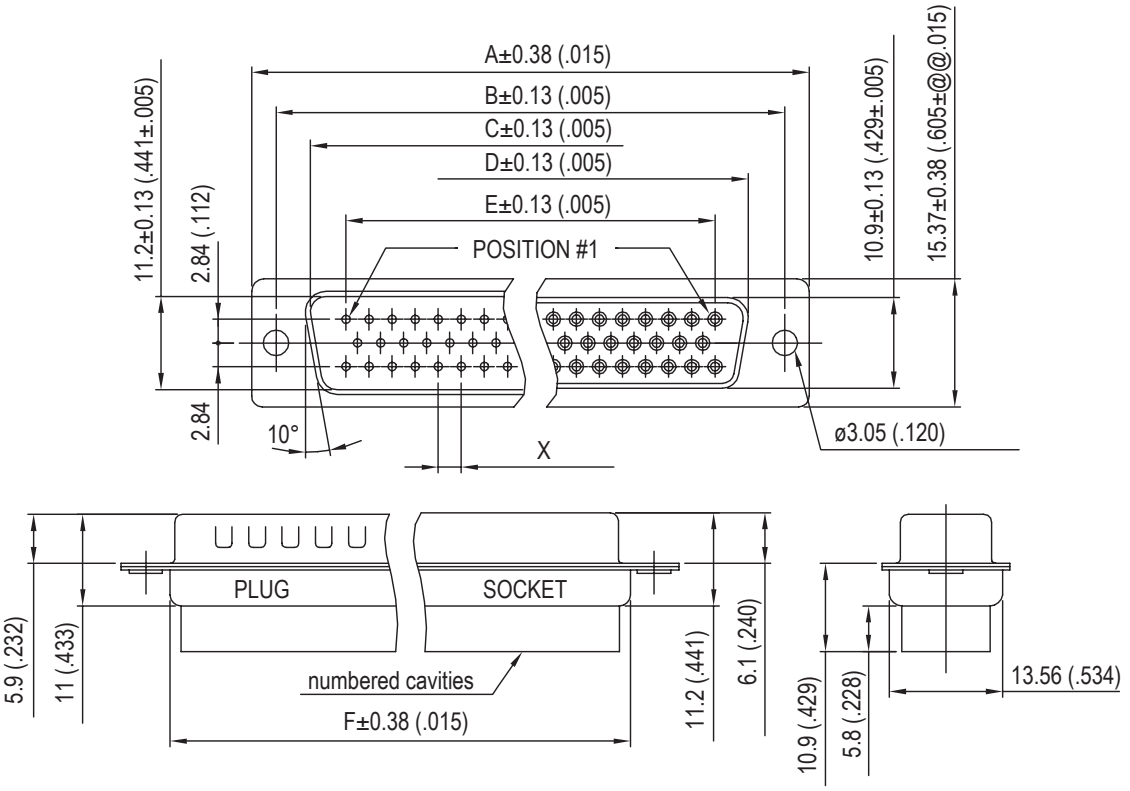

High density HR

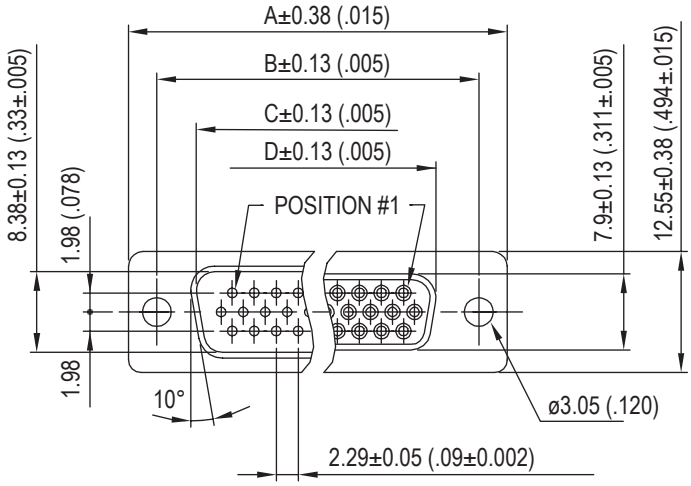

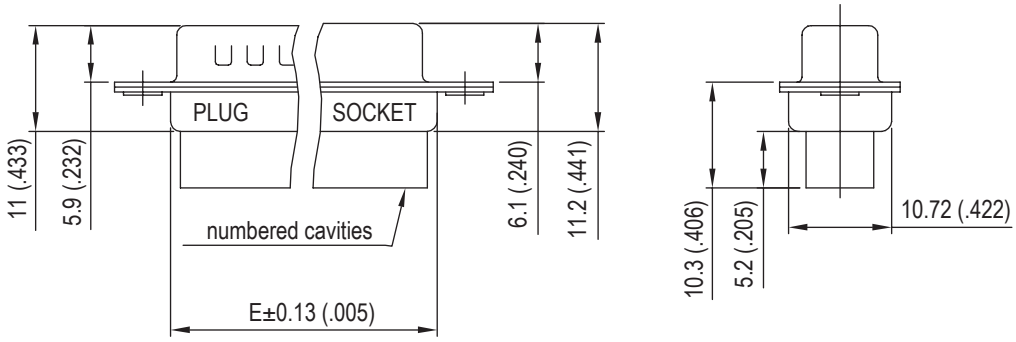

Nb OF CONTACTS	DIMENSIONS mm (inch)				
	A	B	C	D	E
15	30.84 (1.21)	24.99 (.98)	16.92 (.67)	16.24 (.64)	19.28 (.76)
26	39.24 (1.54)	33.32 (1.31)	24.7 (.972)	24.56 (.97)	27.51 (1.08)
44	53.04 (2.09)	47.04 (1.85)	38.96 (1.53)	38.38 (1.51)	41.30 (1.63)
62	69.32 (2.73)	63.50 (2.50)	55.42 (2.18)	54.76 (2.16)	57.71 (2.27)
78	67 (2.64)	61.11 (2.41)	52.86 (2.08)	52.34 (2.06)	55.3 (2.18)

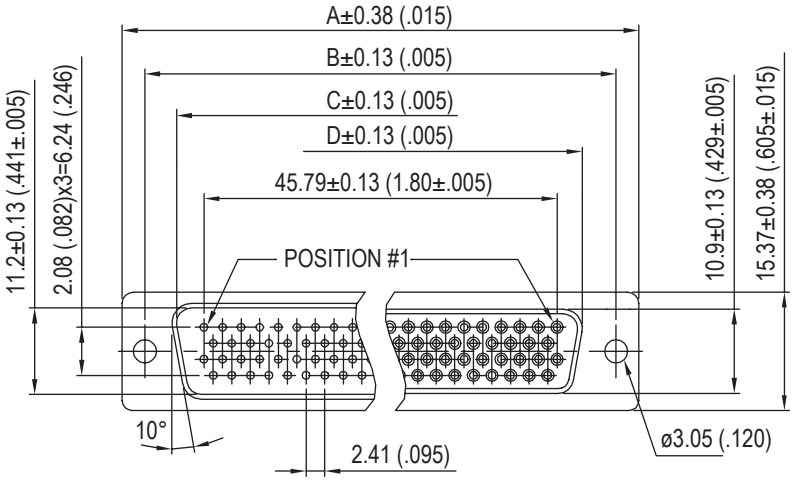

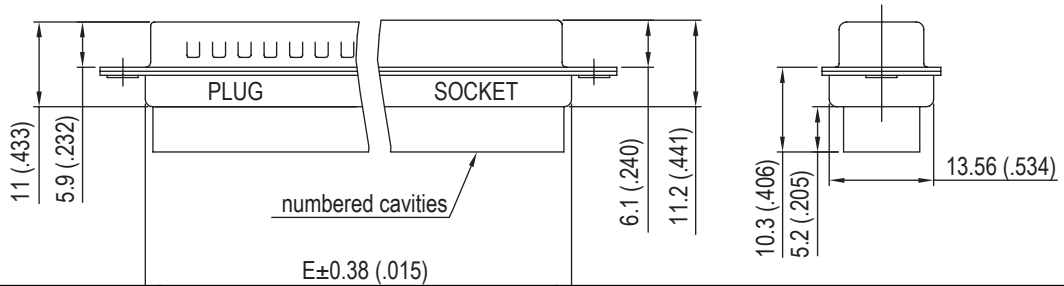

Panel mounting option

Standard density:

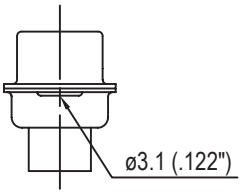

Standard rivet ø 3.1mm
no digit

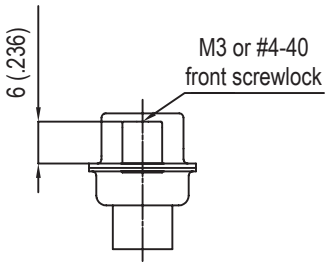

Fixed front female screwlock
VF / VFM

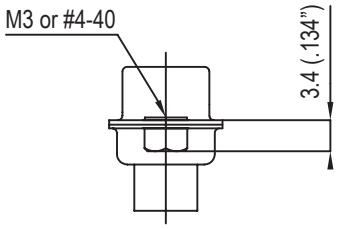

Threaded rear insert
H / G

High density:

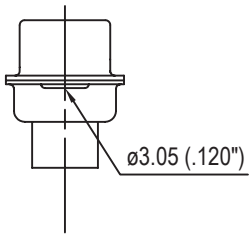

Standard rivet ø3.05mm
no digit

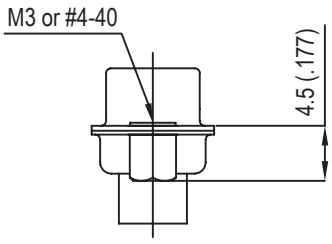

Threaded rear insert
H / G

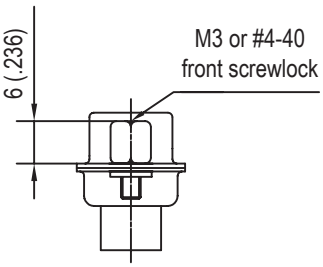

Fixed front female screwlock
VF / VFM

Contacts

Standard density:

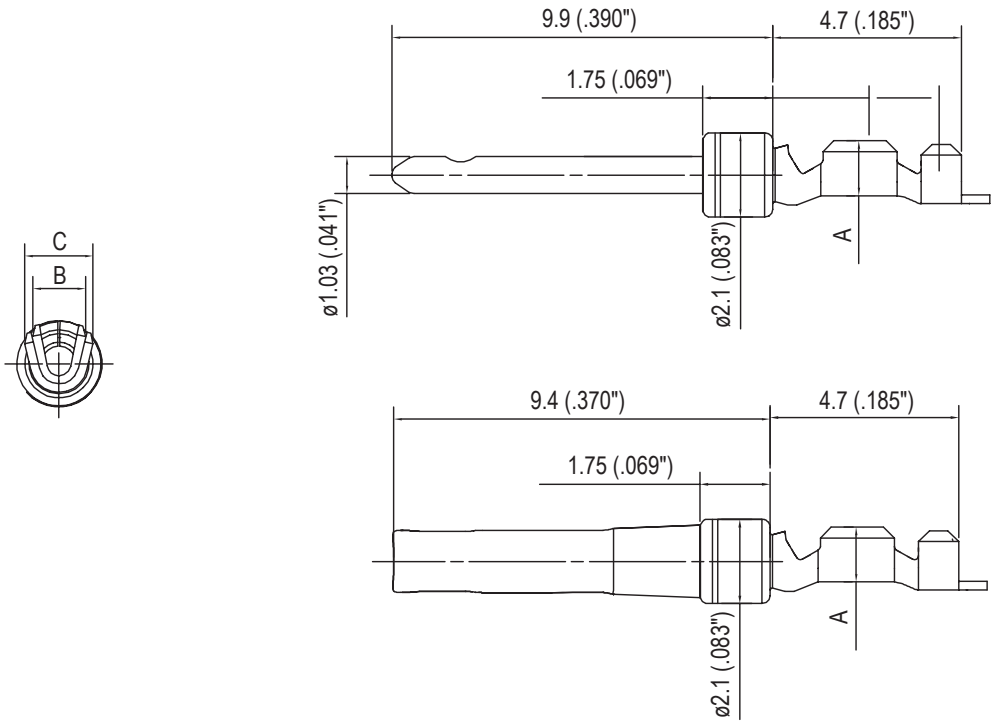

AWG	A	B	C
20-24	1.8 (.071”)	1.9 (.075”)	2.5 (.098”)
24-28	1.4 (.055”)	1.5 (.059”)	1.7 (.066”)

High density:

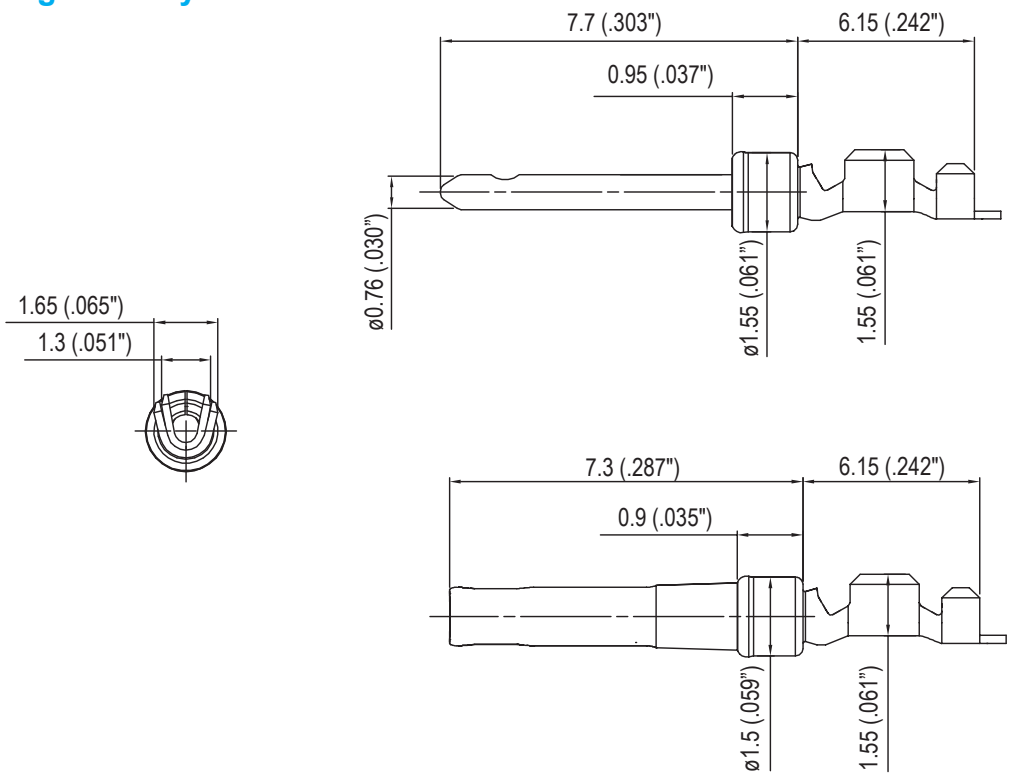

How to order RR (standard density)

Housings

L ..... RR ....

RoHS Compliant

177: tinned shell for recept-acle
777: tinned shell + dimples for plug

shell size: E,A,B,C,D

Rear mounting type:
H = rear insert 4-40
G = rear insert M3
no digit = standard rivet ø3.1mm
F = float mounting

front mounting type:
VF = front screwlock 4-40
VFM = front screwlock M3

contact type:
P = pin
S = socket

configuration:
09,15,25,37,50

Contacts

L 17 RR ....

RoHS Compliant

wire size:
D1: 20 to 24 AWG
D2: 24 to 28 AWG

contact type:
M = male
F = female

full gold plating:
01 = Flash Gold
02 = 0.4µ (15µ")
04 = 0.76µ (30µ")
selective gold plating:
11 = Flash Gold + 2µm (78µ") Sn
12 = 0.4µ (15µ") + 2µm (78µ") Sn
14 = 0.76µ (30µ") + 2µm (78µ") Sn

packaging:
100 = bulkpack unit (100 cts)
400 = reel of 400 cts
2K = reel of 2000 cts
10K = reel of 10000 cts (right feed reel)
10G = reel of 10000 cts (left feed reel)

REEL WINDING DIRECTION

Left to right feed reel:G

Right to left feed reel:K

For special request, please consult factory

How to order HR (high density)

Housings

L ..... HR ....

RoHS Compliant

177: tinned shell for receptacle
777: tinned shell + dimples for plug

shell size: E,A,B,C,D

Rear mounting type:
H = rear insert 4-40
G = rear insert M3
no digit = standard rivet ø3.05mm

front mounting type:
VF = front screwlock 4-40
VFM = front screwlock M3

contact type:
P = pin
S = socket

configuration:
15,26,44,62,78

Contacts

L 17 HR D2 ....

RoHS Compliant

wire size:
24 to 28 AWG

contact type:
M = male
F = female

full gold plating:
01 = Flash Gold
02 = 0.4µ (15µ")
04 = 0.76µ (30µ")
selective gold plating:
11 = Flash Gold + 2µm (78µ") Sn
12 = 0.4µ (15µ") + 2µm (78µ") Sn
14 = 0.76µ (30µ") + 2µm (78µ") Sn

packaging:
5K = reel of 5000 cts (right feed reel)
5G = reel of 5000 cts (left feed reel)
10K = reel of 10000 cts (right feed reel)
10G = reel of 10000 cts (left feed reel)

REEL WINDING DIRECTION

Left to right feed reel:G

Right to left feed reel:K

For special request, please consult factory

Tooling for crimp contacts

For standard density crimp contacts: 17RR series

• contact insertion and removal tool	17D 438 SP
• hand crimp tool for single contacts AWG 20 to 28	17D 440 SP
• hand crimp tool for reels of 400 contacts	FA 0000 762
crimp dies: AWG 20 to 24	FA 0000 104
crimp dies: AWG 24 to 28	FA 0000 102
• stripping box	FE 0400
• automatic crimp machine for reels of 2000 to 10000 contacts	970 MC
crimp dies: AWG 20 to 24	968 MC
crimp dies: AWG 24 to 28	972 MC

For high density crimp contacts: 17HR series

• automatic crimp machine for reels of 2000 to 10000 contacts	970 MC
crimp dies: AWG 24 to 28	973 MC

Do not hesitate to contact us for further information

Amphenol
Amphenol IT & Communication Products
Block A3/A4, The 4th Industrial District of
Industrial Headquarters, Dong Keng Road
Gong Ming Town, Shen Zhen China
Fax:+86(0)755 2754 9955
Technical Support

he information given in this document are as a guideline only. We reserve the right to modify our products in any way we deem necessary. Any duplication is prohibited, unless approved in writing.

DFR

D-Sub connectors - Stamped and Formed Contacts

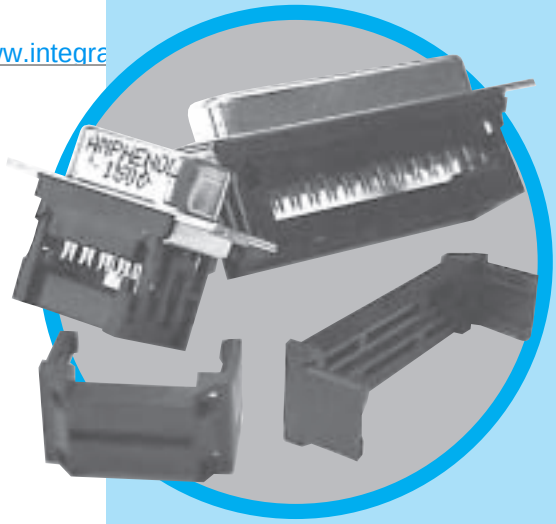

FLAT RIBBON D-SUB CONNECTORS

CHARACTERISTICS

Specifications

• Connectors according to MIL C24308

Materials and Platings	
Shells	Steel with nickel plating
Insulator	Glass-filled thermoplastic, UL 94V-0
Pin contacts	Brass, selected gold in mating area; 2.54µm (100µ") min. tin on termination area over 1.27µm (50µ") min. nickel
Socket contact	Phosphor bronze, selected gold in mating area; 2.54µm (100µ") min. tin on termination area over 1.27µm (50µ") min. nickel
Rear insert	Brass, 2.54µm (100µ") min. nickel plated
Screwlock	Brass, 2.54µm (100µ") min. nickel plated

Electrical Data	
Current rating	5A
Voltage rating	250V AC/rms 60Hz
Withstanding voltage	1000V AC/rms 60Hz for one minute
Insulation resistance	1000MΩ
Contact resistance	20mΩ max

Climatic Data	
Operating temperature	-40°C to +125°C

Mechanical Data

Single contact insertion force 0.54kg (1.19lb) max
Single contact withdrawal force 0.06kg (0.13lb) min
Mating and unmating force
Unit: kg (lb)

No. of Cts	Mate (max)	Unmate (min)
9 (size E)	3.05 (6.74)	0.36 (0.79)
15 (size A)	5.09 (11.24)	0.46 (1.01)
25 (size B)	8.44 (18.66)	0.81 (1.8)
37 (size C)	12.51 (27.65)	1.1 (2.47)

Standard plating thicknesses
• gold flash
• 0.4µm (15µ") gold
• 0.76 µm (30µ") gold

DESCRIPTION

These connectors are suitable for compact requirement of modern peripheral equipment.

Special contact design allows usage of standard 1.27mm (.05") flat cable. Suitable with all standard D-Sub hoods.

Simplify Your cable assemblies !

APPLICATIONS

- Industrial
- Telecom
- Any industry standard I / O connections

DFR / E12

Amphenol RoHS Compliant EU 2002/95/EC

OVERALL DIMENSIONS

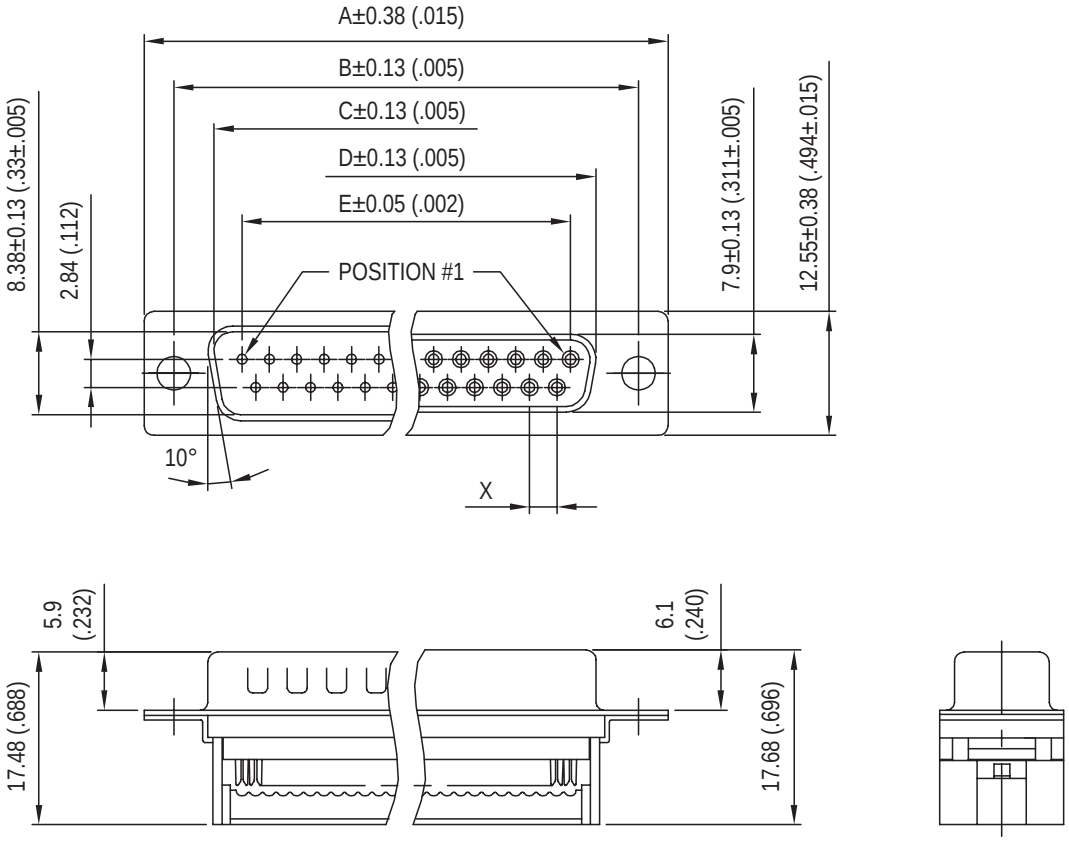

Nb OF CONTACTS	DIMENSIONS mm (inch)					
	A	B	C	D	E	X
9	30.84 (1.21)	24.99 (.984)	16.92 (.666)	16.24 (.639)	11.09 (.437)	2.74
15	39.24 (1.54)	33.32 (1.31)	24.70 (.972)	24.56 (.967)	19.39 (.763)	2.74
25	53.04 (2.09)	47.04 (1.85)	38.96 (1.53)	38.38 (1.51)	33.24 (1.31)	2.77
37	69.32 (2.73)	63.50 (2.50)	55.42 (2.18)	54.76 (2.16)	49.86 (1.96)	2.77

STRAIN RELIEF

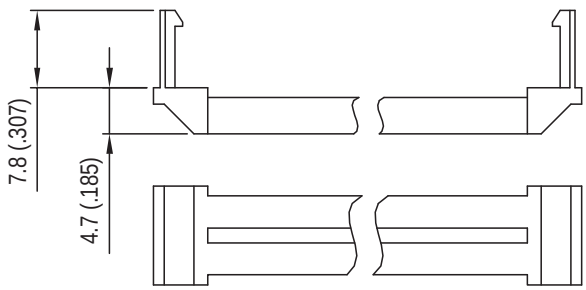

Amphenol

Panel mounting option

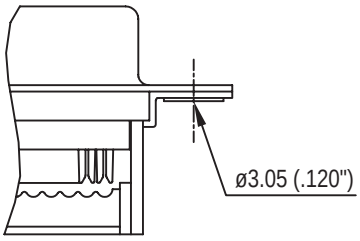

Standard rivet ø 3.05mm
no digit

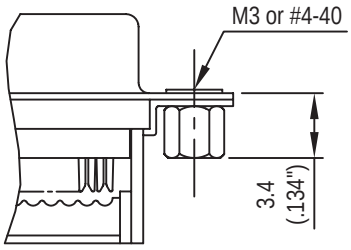

Threaded rear insert
B / D

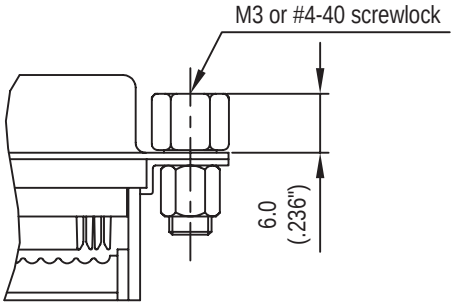

Front female screwlock
A / C

Tool

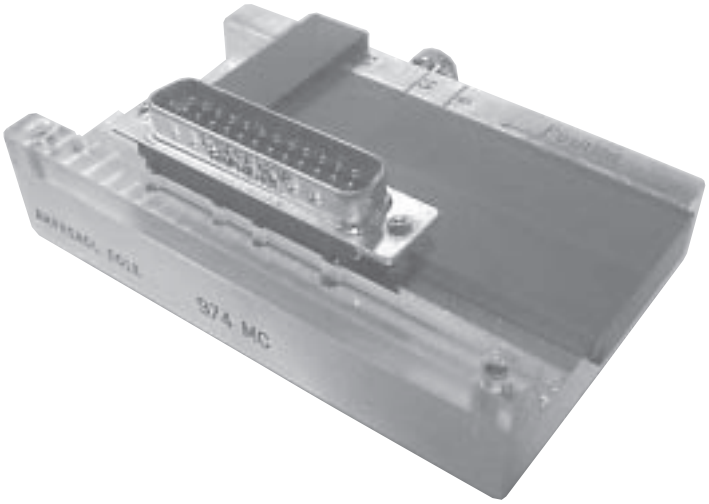

Support for hand termination tool:
974MC

NOTES

How to order

L ... ... FR C309

RoHS Compliant

flash gold	17D: tinned shell for plug and receptacle
0.4µm (15µ")	117D: tinned shell for plug and receptacle

shell size: E,A,B,C

Flat ribbon cable type

mounting options:
no digit = standard rivet ø 3.05mm
A = front screwlock M3
C = front screwlock 4-40
B = rear insert M3
D = rear insert 4-40

Plating option:
valid only for
0.76µm (30µ")
part number must be written
as follow:
L 17D……C309
or
L 117D……..C309

contact type:
P = pin
S = socket

configuration:
09, 15, 25, 37

type:
A = front metal shell
B = all plastic

: Standard options

For special request, please consult factory

Do not hesitate to contact us for further information

Amphenol

Amphenol IT & Communication Products
Block A3/A4, The 4th Industrial District of
Industrial Headquarters, Dong Keng Road
Gong Ming Town, Shen Zhen China
Fax:+86(0)755 2754 9955
Technical Support

he information given in this document are as a guideline only. We reserve the right to modify our products in any way we deem necessary. Any duplication is prohibited, unless approved in writing.

17H

D-Sub connectors - Stamped and Formed Contacts

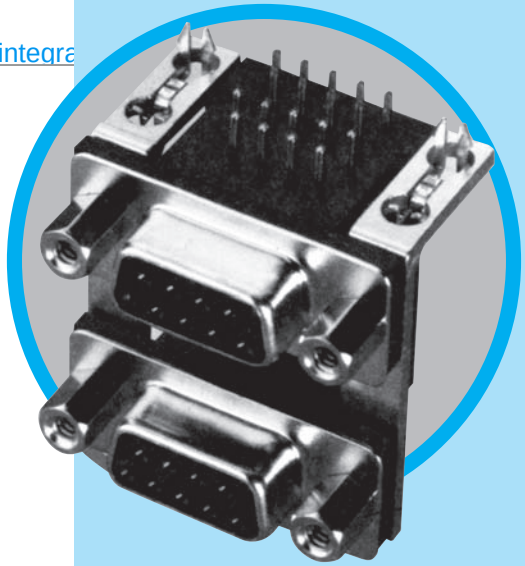

DUAL PORT D-SUB CONNECTORS

MAIN CHARACTERISTICS

Specifications

• Connectors according to MIL C24308

Materials and platings	
Shells	Steel, tin plated
Insulator	Glass-filled thermoplastic, UL 94V-0
Pin contacts	Brass, selected gold in mating area; 2.54µm (100µ") min. tin on termination area over 1.27µm (50µ") min. nickel
Socket contact	Phosphor bronze, selected gold in mating area; 2.54µm (100µ") min. tin on termination area over 1.27µm (50µ") min. nickel
Rear insert	Brass, 2.54µm (100µ") min. nickel plated
Boardlock	Phosphor bronze, 2.54µm (100µ") min. tin plated
Screwlock	Brass, 2.54µm (100µ") min. nickel plated

Electrical Data	
Current rating	3A
Voltage rating	250V AC/rms 60Hz
Withstanding voltage	1000V AC/rms 60Hz for one minute
Insulation resistance	1000MΩ
Contact resistance	20mΩ max

Climatic Data	
Operating temperature	-55°C to +125°C
Salt spray	24 hours

Mechanical Data	
Single contact insertion force	0.54kg (1.19lb) max
Single contact withdrawal force	0.06kg (0.13lb) min
Mating and unmating force	

Unit: kg (lb)

No. of Cts	Mate (max)	Unmate (min)
9	3.05 (6.74)	0.36 (0.79)
15	5.09 (11.24)	0.46 (1.01)
25	8.44 (18.66)	0.81 (1.8)
15 (Hi-den)	3.81 (8.42)	0.52 (1.14)

Standard plating thicknesses
- gold flash
- 0.4µm (15µ") gold
- 0.76 µm (30µ") gold

DESCRIPTION

Amphenol's G17H dual port connectors are a state of the art design. The front metal shell helps reduce EMI / RFI emissions.

Designed to save PC board space, Amphenol 's dual port provides two I / O connectors in a minimal amount of board space.

Economical dual port connectors

APPLICATIONS

- **Industrial**
- **Telecom**
- **Any industry standard I / O connections**

17H / E13

Amphenol RoHS Compliant EU 2002/95/EC

OVERALL DIMENSIONS

Shell size dimensions- standard and high density

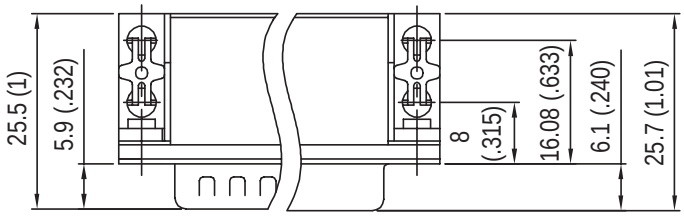

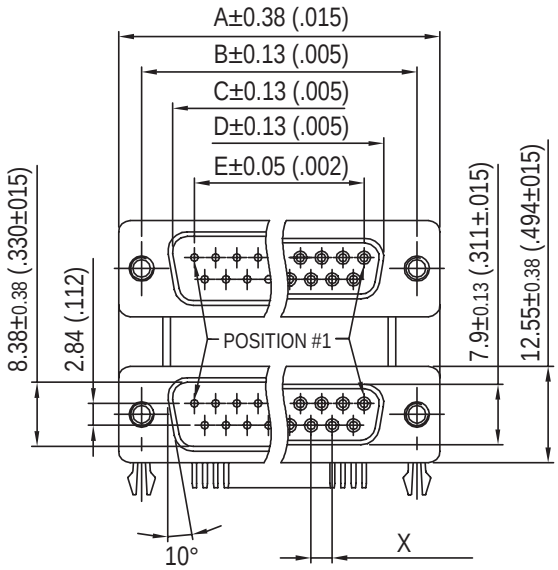

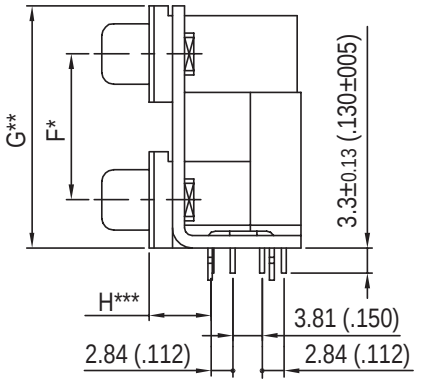

* spacing between ports (see "how to order" for dimensions)
** profile distance (see "how to order" for dimensions)
*** Footprint options (see "how to order" for dimensions)
H*** Standard Density (SD)
High Density (HD)
SD / SD = 8.08mm (.318")
SD / HD = 5.08mm (.200")
= 8.89mm (.350")
HD / HD = 8.89mm (.350")
= 5.08mm (.200")

Recommended P.C.B. Layout

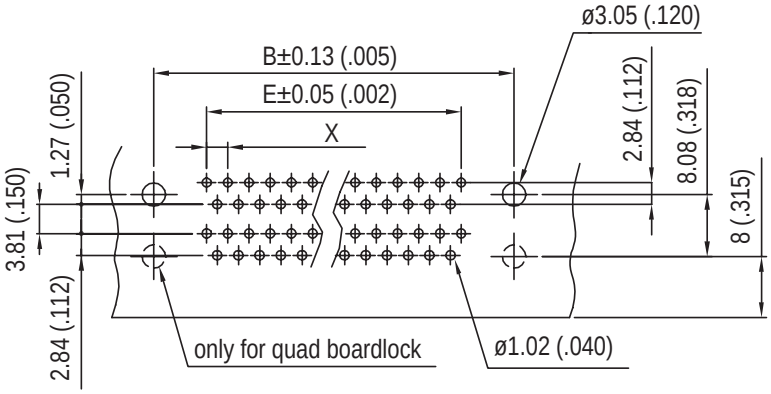

Shell Size	Nb OF CONTACTS	DIMENSIONS mm (inch)				
		A	B	C PLUG	D SOCKET	E
E	9/HD 15	30.84 (1.21)	24.99 (.984)	16.92 (.666)	16.24 (.639)	11.09 (.437)
A	15/HD 26	39.24 (1.54)	33.32 (1.31)	24.7 (.972)	24.56 (.967)	19.39 (.763)
B	25	53.04 (2.09)	47.04 (1.85)	38.96 (1.53)	38.38 (1.51)	33.24 (1.31)
E	15 (Hi-den)	30.84 (1.21)	24.99 (.984)	16.92 (.666)	16.24 (.639)	10.31 (.406)
C	37	69.32 (2.73)	63.50 (2.50)	55.42 (2.18)	54.76 (2.16)	49.86 (1.96)

Amphenol

Panel mounting option

Flange mounting options:

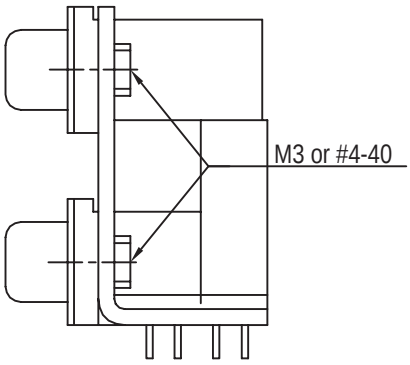

Threaded rear insert
0 / 4

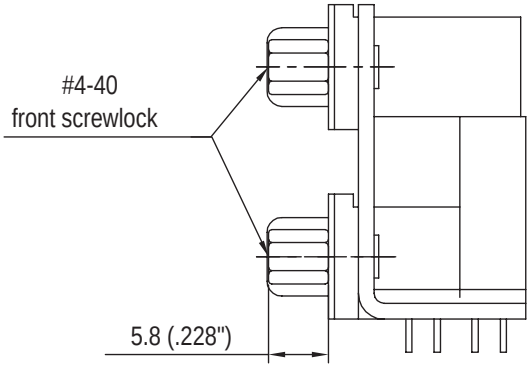

Fixed front female screwlock
7

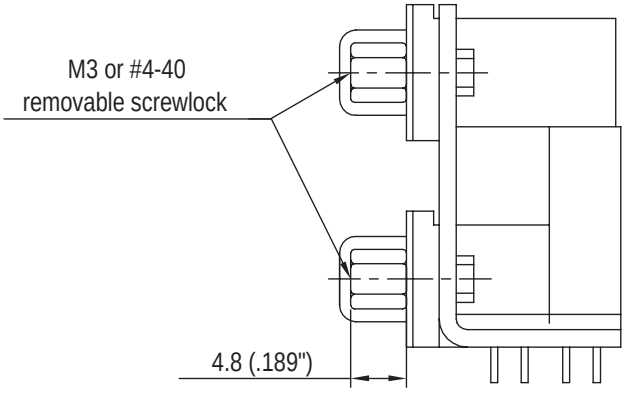

Removable female screwlock
1 / 5

Board mounting options:

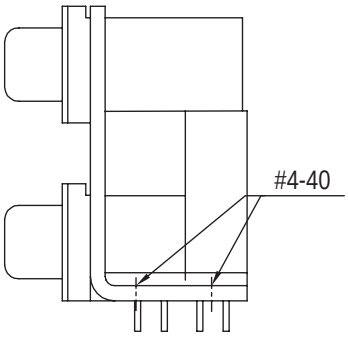

Threaded hole
1

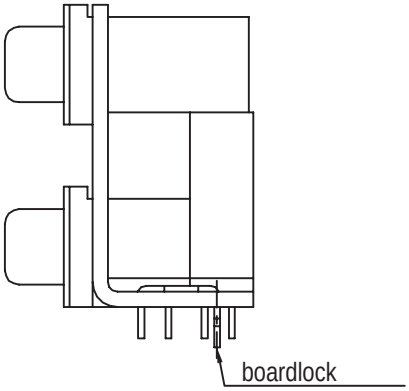

Dual arrowhead boardlock
2

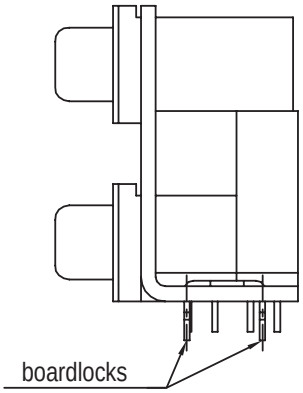

Quad arrowhead boardlock
3

NOTES

Dual Port Connectors

L17H X X X X X X X X

Spacing Between Ports

1 - **F** = 15.88mm (.625")
G = 28.42mm (1.12")
2 - **F** = 19.05mm (.750")
G = 31.60mm (1.24")
3 - **F** = 22.86mm (.900")
G = 35.41mm (1.39")
4 - **SCSI**
G = 12.80mm (.504")
7 - **F** = 20.70mm (.815")
G = 32.20mm (1.26")

Top Connector

1 = 9 Pos. Male
2 = 9 Pos. Female
3 = 15 Pos. Male
4 = 15 Pos. Female
5 = 25 Pos. Male
6 = 25 Pos. Female
7 = 15 Pos. High Density Female
8 = 50 Pos. Female SCSI
9 = 26 Pos. High Density Female
J = 15 Pos. High Density Male
D = 37 Pos. Male
E = 37 Pos. Female
F = 44 Pos. High Density Male
G = 44 Pos. High Density Female
M = 62 Pos. High Density Male
N = 62 Pos. High Density Female
P = 78 Pos. High Density Male
Q = 78 Pos. High Density Female

Bottom Connector

1 = 9 Pos. Male
2 = 9 Pos. Female
3 = 15 Pos. Male
4 = 15 Pos. Female
5 = 25 Pos. Male
6 = 25 Pos. Female
7 = 15 Pos. High Density Female
8 = 50 Pos. Female SCSI
9 = 26 Pos. High Density Female
K = 15 Pos. High Density Male
D = 37 Pos. Male
E = 37 Pos. Female
F = 44 Pos. High Density Male
G = 44 Pos. High Density Female
M = 62 Pos. High Density Male
N = 62 Pos. High Density Female
P = 78 Pos. High Density Male
Q = 78 Pos. High Density Female
R = 9 Pos. Male + 9 Pos. Male
S = 9 Pos. Female + 9 Pos. Female

Footprint Options

SD / SD
BLANK = 8.08mm (.318")
SD / HD
BLANK = 5.08mm (.200")
889 = 8.89mm (.350")
HD / HD
BLANK = 8.89mm (.350")
508 = 5.08mm (.200")

Flange Mounting Options

0 = 4-40unc Rear Insert
1 = 4-40unc Removable Screwlock
3 = 3.05mm (.120") Clear Hole
4 = M3 Rear Insert
5 = M3 Removable Screwlock
7 = 4-40unc Fixed Front Screwlock

Board Mounting Options

1 = 4 * Threaded 4-40unc Inserts
2 = Dual Arrowhead Boardlocks
3 = Quad Arrowhead Boardlocks
4 = 3.18mm (.125") Clear Hole

Shell Plating

1 = Bright Tin / Nickel
2 = Nickel

Contact Plating

0 = Flash Gold
1 = 0.4µm (15µ") Gold
2 = 0.76µm (30µ") Gold
3 = Full Flash Gold
4 = 1.27µ" (50µ") Gold

For special request, please consult factory

Do not hesitate to contact us for further information

Amphenol

Amphenol IT & Communication Products
Block A3/A4, The 4th Industrial District of
Industrial Headquarters, Dong Keng Road
Gong Ming Town, Shen Zhen China
Fax:+86(0)755 2754 9955
Technical Support

he information given in this document are as a guideline only. We reserve the right to modify our products in any way we deem necessary. Any duplication is prohibited, unless approved in writing.

HT

D-Sub connectors - Stamped and Formed Contacts

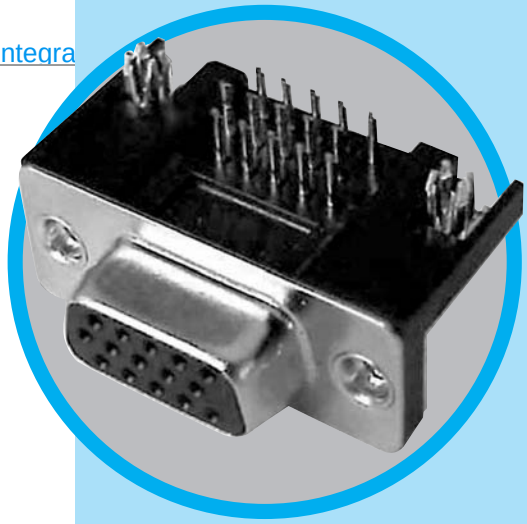

RIGHT ANGLE HIGH TEMPERATURE AND HIGH DENSITY CONNECTORS

CHARACTERISTICS

Specifications

• Connectors according to MIL C24308

Materials and Platings	
Shell	Steel, tin over nickel plating
Insulator	Glass filled thermoplastic, UL 94V-0
Contacts	Copper alloy, selective gold plating
Rear insert	Brass with nickel plating
Screwlock	Brass with nickel plating
Grounding clip	Copper alloy with tin plating

Electrical Data	
Current rating	3A
Voltage rating	300V AC/rms 50Hz
Withstanding voltage	1000V AC/rms 50Hz for one minute
Insulation resistance	5000MΩ
Contact resistance	10mΩ max

Climatic Data	
Operating temperature	-55°C to +150°C, resist to short term (30s) at 260°C

Mechanical Data

Mating and unmating force
Unit: kg (lb)

No. of Cts	Mate (max)	Unmate (min)
15	3.81 (8.42)	0.52 (1.14)
26	5.95 (13.16)	1.05 (2.32)
44	9.26 (20.46)	1.37 (3.02)
62	13.48 (29.78)	1.76 (3.88)

Standard plating thicknesses
• gold flash
• 0.4 µm (15µ") gold
• 0.76 µm (30µ") gold

DESCRIPTION

The Amphenol "HT" series allows the customers to use through hole connectors with reflow soldering process.

This series gives you Amphenol's high standards of quality and reliability to meet of your commercial requirements

Economical right angle PCB, high temperature connectors

APPLICATIONS

- Industrial
- Telecom
- Any industry standard I / O connections

HT / E14

Amphenol RoHS Compliant EU 2002/95/EC

OVERALL DIMENSIONS

Shell size dimensions

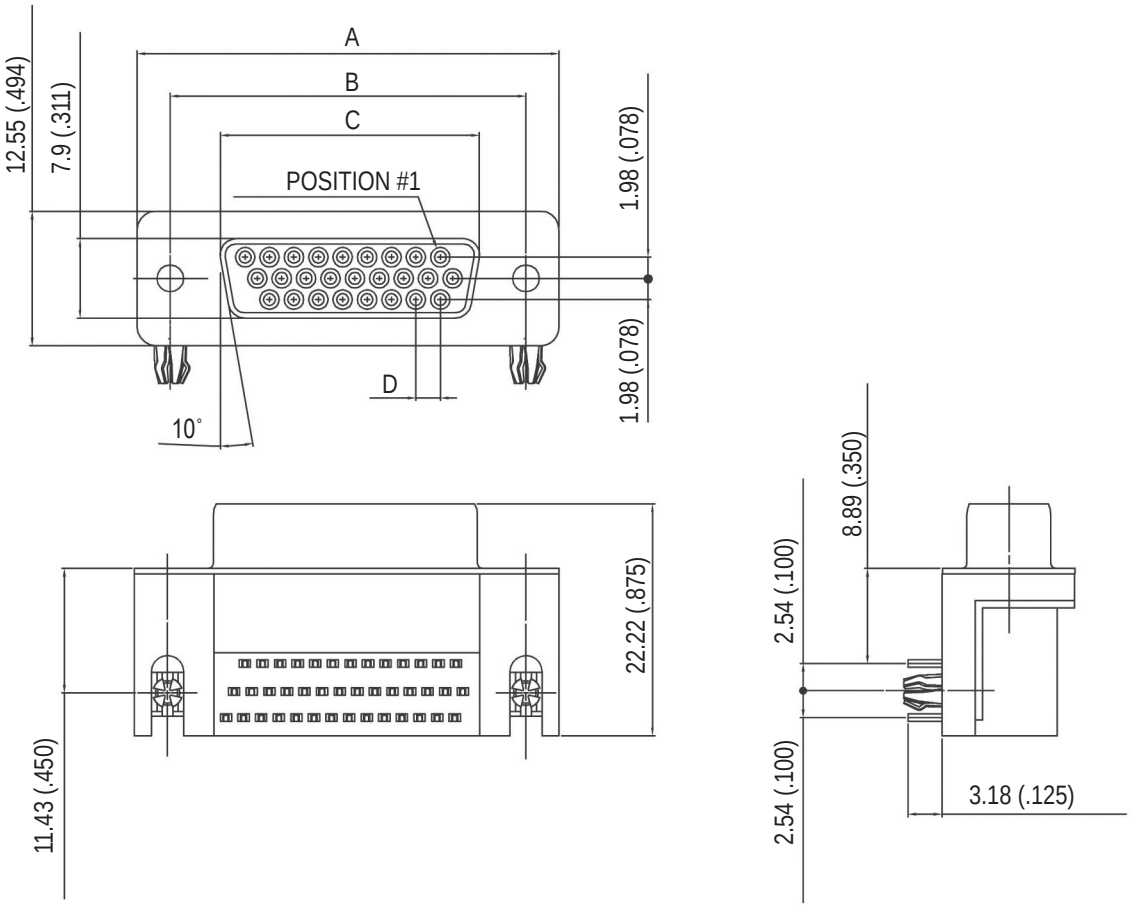

Nb OF CONTACTS	Dimensions mm (inch)			
	A	B	C	D
15	30.84 (1.214)	24.99 (.984)	16.26 (.640)	2.29 (.090)
26	39.24 (1.545)	33.32 (1.312)	24.56 (.967)	2.29 (.090)
44	53.04 (2.088)	47.04 (1.852)	38.30 (1.508)	2.29 (.090)
62	69.34 (2.730)	63.50 (2.500)	54.76 (2.156)	2.41 (.095)

Amphenol

P.C.B. Layout

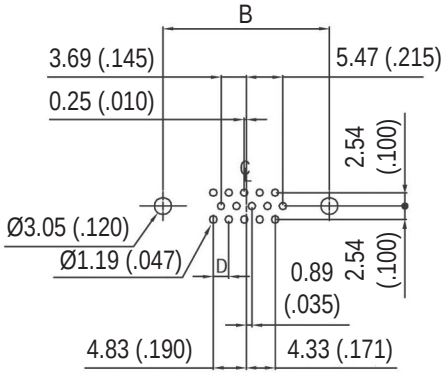

15 PIN

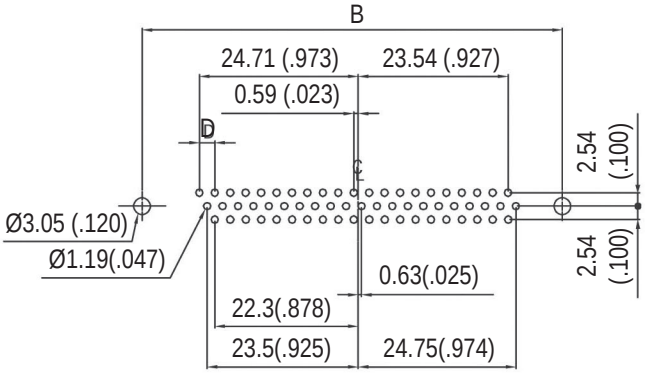

62 PIN

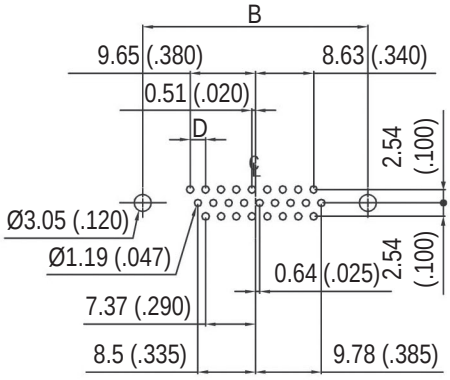

26 PIN

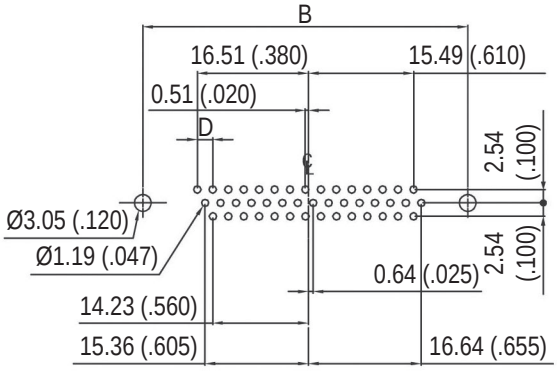

44 PIN

Panel mounting option

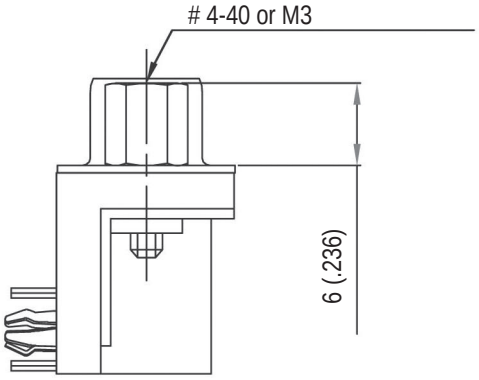

Front female screwlock
4F/3F

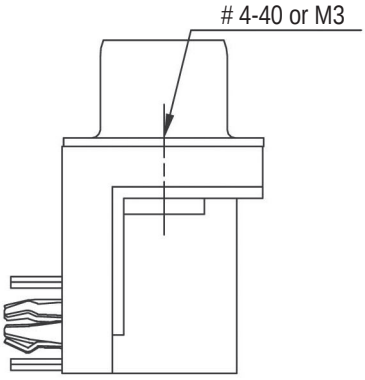

Threaded rear insert
4F/3F

NOTES

How to order

L 17 HT H ... ...

RoHS Compliant

high density

shell size:
E (15 ways)
A (26 ways)
B (44 ways)
C (62 ways)

contact type:
P = Pin
S = Socket

mounting options:
4F = front screwlock 4-40
4R = rear insert 4-40
3F = front screwlock M3
3R = rear insert M3

options:
O = open back side
no digit = closed back side

packaging:
C = plastic tray

contact plating:
1 = gold flash
2 = 0.4µm (15µ")
4 = 0.76µm (30µ")

For special request, please consult factory

Do not hesitate to contact us for further information

Amphenol

Amphenol IT & Communication Products
Block A3/A4, The 4th Industrial District of
Industrial Headquarters, Dong Keng Road
Gong Ming Town, Shen Zhen China
Fax:+86(0)755 2754 9955
Technical Support

he information given in this document are as a guideline only. We reserve the right to modify our products in any way we deem necessary. Any duplication is prohibited, unless approved in writing.

HT

D-Sub connectors - Stamped and Formed Contacts

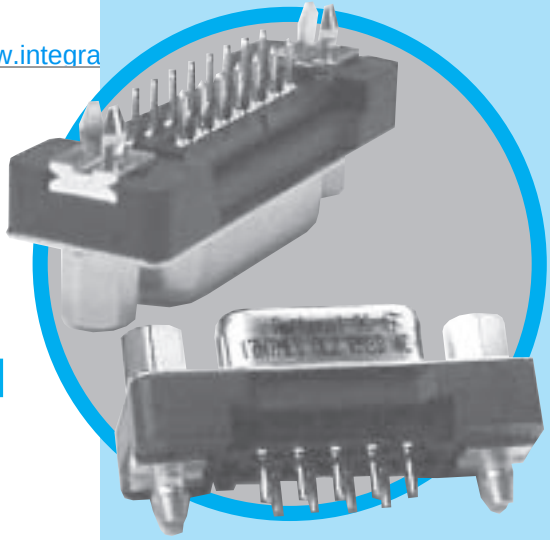

STRAIGHT PCB TERMINATION HIGH TEMPERATURE CONNECTORS

CHARACTERISTICS

Specifications

• Connectors according to MIL C24308

Materials and Platings	
Shell	Steel, tin over nickel plating
Insulator	Glass-filled thermoplastic, UL 94V-0
Contacts	Copper alloy, selective gold plating
Boardlock	Brass with nickel plating
Screwlock	Brass with nickel plating

Electrical Data	
Current rating	5A
Voltage rating	600V AC/rms 50Hz
Withstanding voltage	1000V AC/rms 50Hz for one minute
Insulation resistance	5000MΩ
Contact resistance	10mΩ max

Climatic Data	
Operating temperature	-55°C to +150°C, resist to short term (30s) at 260°C

Mechanical Data

Mating and unmating force
Unit: kg (lb)

No. of Cts	Mate (max)	Unmate (min)
9	3.05 (6.74)	0.36 (0.79)
15	5.09 (11.24)	0.46 (1.01)
25	8.44 (18.66)	0.81 (1.8)
37	12.51 (27.65)	1.1 (2.47)

Standard plating thicknesses
• gold flash
• 0.76 µm (30µ") gold

DESCRIPTION

The Amphenol "HT" series allows the customers to use through hole connectors with reflow soldering process.

This series gives you Amphenol's high standards of quality and reliability to meet all of your commercial requirements

Economical straight PCB, high temperature connectors

APPLICATIONS

- Industrial
- Telecom
- Any industry standard I / O connections

HT / E15

Amphenol RoHS Compliant EU 2002/95/EC

OVERALL DIMENSIONS

Shell size dimensions

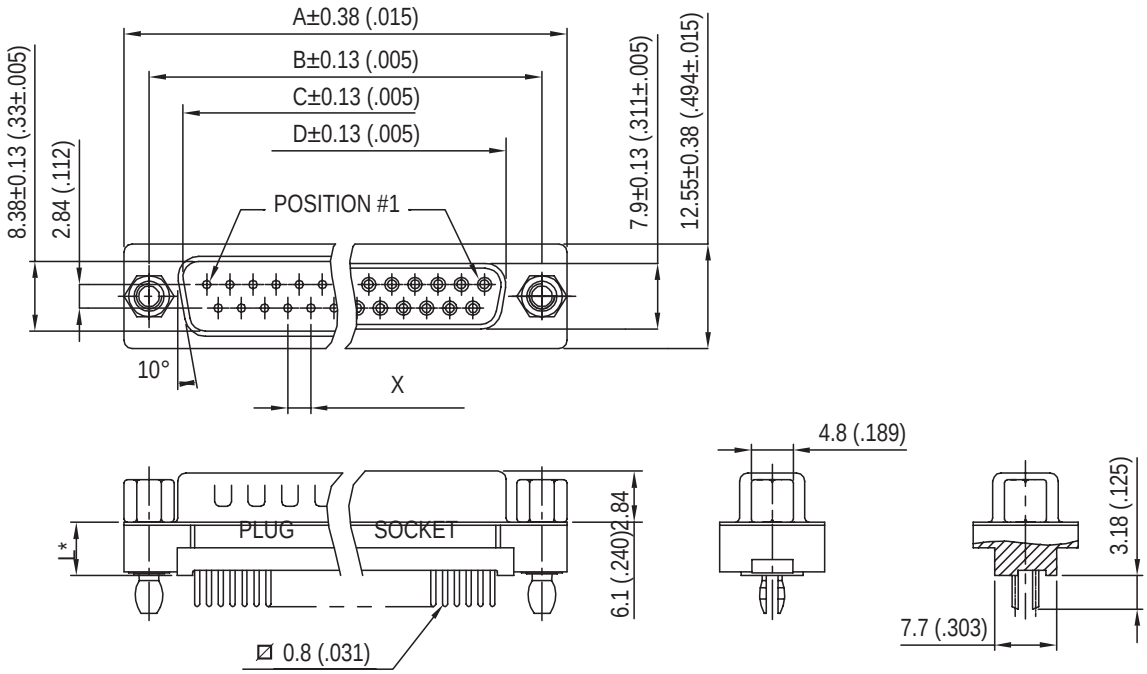

***see chart "how to order"**

Recommended P.C.B.Layout

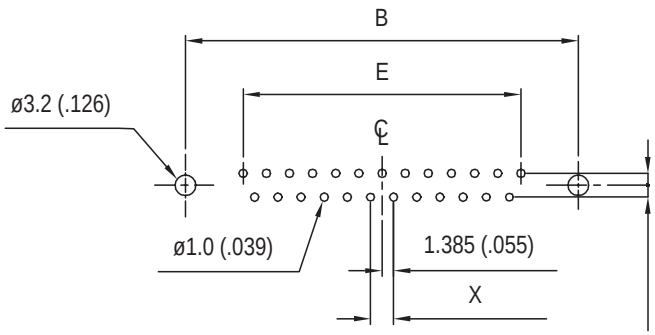

Nb OF CONTACTS	DIMENSIONS mm (inch)					
	A	B	C	D	E	X
9	30.84 (1.21)	24.99 (.984)	16.92 (.666)	16.26 (.640)	11.08 (.436)	2.74
15	39.24 (1.54)	33.32 (1.31)	25.25 (.994)	24.56 (.967)	19.39 (.763)	2.74
25	53.04 (2.09)	47.04 (1.85)	38.96 (1.53)	38.38 (1.51)	33.24 (1.31)	2.77
37	69.34 (2.73)	63.50 (2.50)	55.42 (2.18)	54.76 (2.16)	49.86 (1.96)	2.77

Amphenol

Panel mounting option

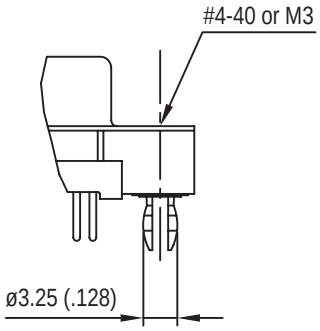

Standoff boardlock
RM5

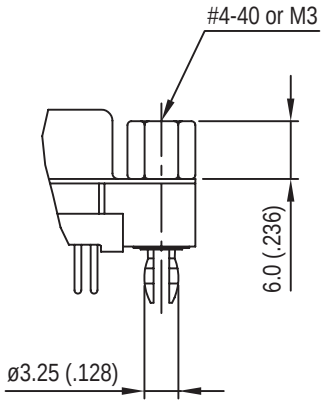

Standoff boardlock
RM8

How to order

L 17 HT N ... ...

RoHS Compliant

standard density

shell size:
E (9 ways)
A (15 ways)
B (25 ways)
C (37 ways)

mounting options:
G = M3
H = 4-40
H,G must also be used to specify the threading of RM5 or RM8 grounding tabs.

contact type:
P = pin
S = socket

termination:
OL2: L = 6.02mm (.237")
OL2C: L = 11.48mm (.452")
OL2E: L = 11.95mm (.470")

packaging:
C = plastic tray
T = plastic tubes

contact plating:
1 = gold flash
2 = 0.4µm (15µ")
4 = 0.76µm (30µ")

grounding tabs:
RM5 = retention clip
RM8 = retention clip
+front screwlock

For special request, please consult factory

HT

D-Sub connectors - Stamped and Formed Contacts

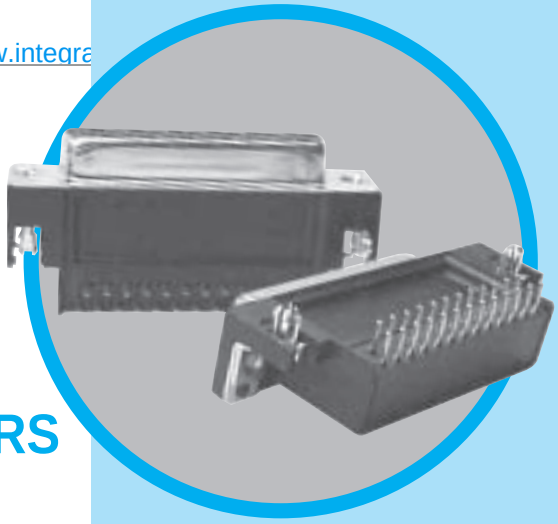

RIGHT ANGLE HIGH TEMPERATURE CONNECTORS FOOTPRINT 14.99mm (.590")

CHARACTERISTICS

Specifications

• Connectors according to MIL C24308

Materials and Platings	
Shells	Steel, tin over nickel plating
Insulator	Glass-filled thermoplastic, UL 94V-0
Contacts	Copper alloy, selective gold plating
Rear insert	Brass with nickel plating
Screwlock	Brass with nickel plating
Grounding clip	Copper alloy with tin plating

Electrical Data	
Current rating	5A
Voltage rating	600V AC/rms 50Hz
Withstanding voltage	1000V AC/rms 50Hz for one minute
Insulation resistance	5000MΩ
Contact resistance	10mΩ max

Climatic Data	
Operating temperature	-55°C to +150°C, resist to short term (30s) at 260°C

Mechanical Data

Mating and unmating force
Unit: kg (lb)

No. of Cts	Mate (max)	Unmate (min)
9	3.05 (6.74)	0.36 (0.79)
15	5.09 (11.24)	0.46 (1.01)
25	8.44 (18.66)	0.81 (1.8)
37	12.51 (27.65)	1.1 (2.47)

Standard plating thicknesses
• gold flash
• 0.4 µm (15µ") gold
• 0.76 µm (30µ") gold

DESCRIPTION

The Amphenol "HT" series allows the customers to use through hole connectors with reflow soldering process.

This series gives you Amphenol's high standards of quality and reliability to meet all of your commercial requirements

Economical right angle PCB, high temperature connectors

APPLICATIONS

- Industrial
- Telecom
- Any industry standard I / O connections

HT / E16

Amphenol RoHS Compliant EU 2002/95/EC

OVERALL DIMENSIONS

Shell size dimensions

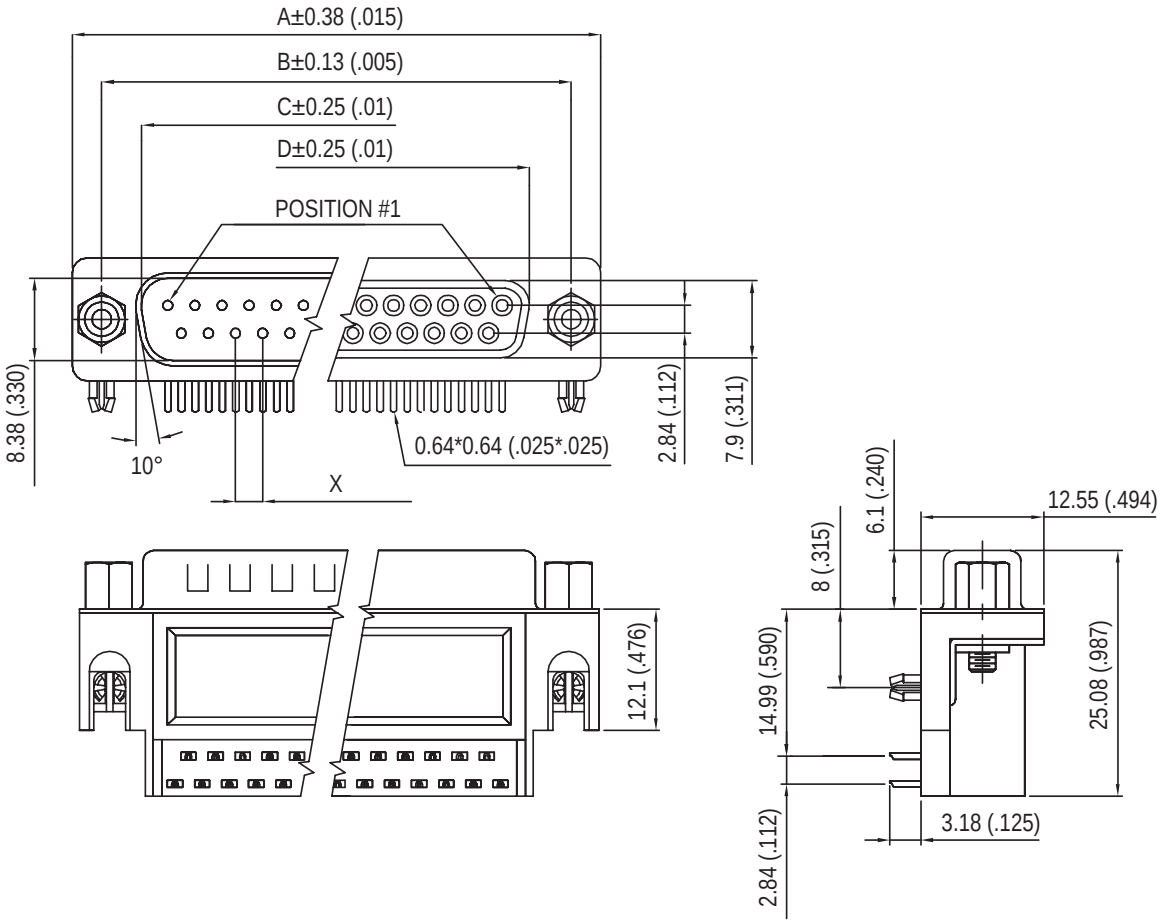

Recommended P.C.B.Layout

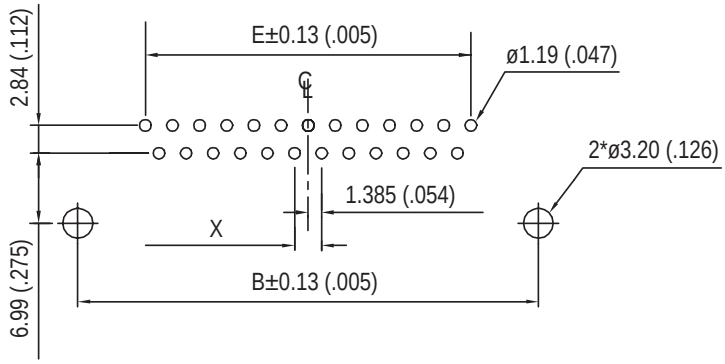

Nb OF CONTACTS	DIMENSIONS mm (inch)					
	A	B	C	D	E	X
9	30.84 (1.214)	24.99 (.984)	16.92 (.666)	16.26 (.640)	11.08 (.436)	2.74
15	39.24 (1.545)	33.32 (1.312)	25.25 (.994)	24.56 (.967)	19.39 (.763)	2.74
25	53.04 (2.088)	47.04 (1.852)	38.96 (1.534)	38.30 (1.508)	33.24 (1.309)	2.77
37	69.34 (2.730)	63.50 (2.500)	55.42 (2.182)	54.76 (2.156)	49.86 (1.963)	2.77

Amphenol

Panel mounting option

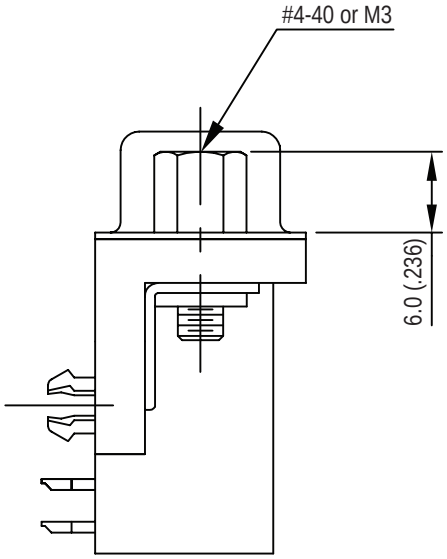

Front female screwlock
4F/3F

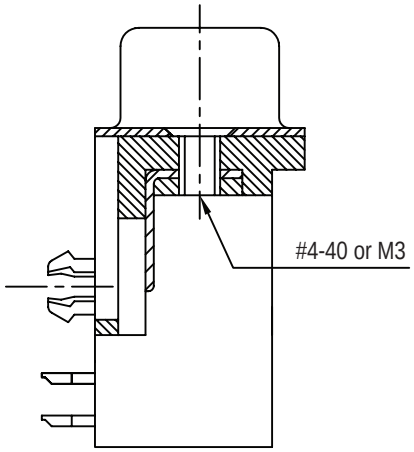

Threaded rear insert
4R/3R

How to order

17 HT N … … AB … … … …

standard density

shell size:
E (9 ways)
A (15 ways)
B (25 ways)
C (37 ways)

contact type:
P = pin
S = socket

footprint:14.99mm (.590")

options:
O = open back
no digit = closed back

packaging:
C = plastic tray
T = plastic tubes

contact plating:
1 = gold flash
2 = 0.38µm (15µ")
4 = 0.76µm (30µ")

mounting options:
4R = rear insert 4-40
3R = rear insert M3
4F = front screwlock 4-40
3F = front screwlock M3

For special request, please consult factory

HTN

D-Sub connectors - Stamped and Formed Contacts

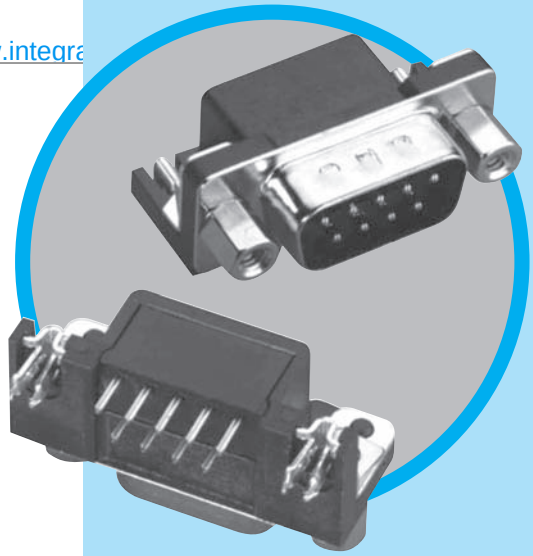

RIGHT ANGLE HIGH TEMPERATURE CONNECTORS

CHARACTERISTICS

Specifications

- Connectors according to MIL C24308

Materials and Platings	
Shell	Steel, tin over nickel plating
Insulator	Glass-filled thermoplastic, UL 94V-0
Contacts	Copper alloy, selective gold plating
Rear insert	Brass, tin over nickel plating
Screwlock	Brass, tin over nickel plating
Grounding clip	Copper alloy with tin plating

Electrical Data	
Current rating	5A
Voltage rating	600V AC/rms 50Hz
Withstanding voltage	1000V AC/rms 50Hz for one minute
Insulation resistance	5000MΩ
Contact resistance	10mΩ max

Climatic Data	
Operating temperature	-55°C to +150°C, resist to short term soldering at 260°C for 20sec.

Mechanical Data

Mating and unmating force
Unit: kg (lb)

No. of Cts	Mate (max)	Unmate (min)
9	3.05 (6.74)	0.36 (0.79)
15	5.09 (11.24)	0.46 (1.01)
25	8.44 (18.66)	0.81 (1.8)
37	12.51 (27.65)	1.1 (2.47)

Standard plating thicknesses
- Gold flash
- 0.4 µm (15µ") Gold
- 0.76 µm (30µ") Gold

DESCRIPTION

The Amphenol HTN series allows the use of a through hole connector with reflow soldering process.
This series gives you Amphenol's high standard of quality and reliability, to meet all of your commercial requirements.

Economical right angle PDB, hight temperature connectors

APPLICATIONS

- Industrial
- Telecom
- Any industry standard I / O connections

HTN / E17

Amphenol RoHS Compliant EU 2002/95/EC

OVERALL DIMENSIONS

Shell size dimensions

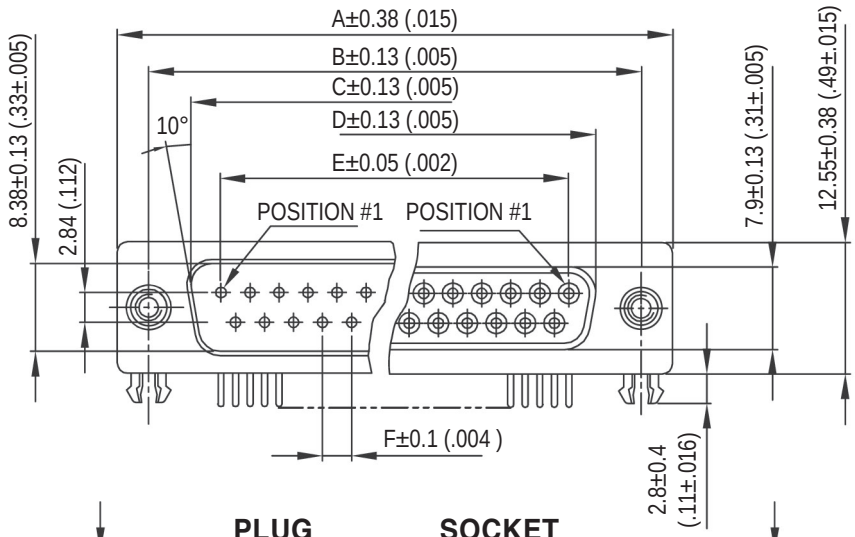

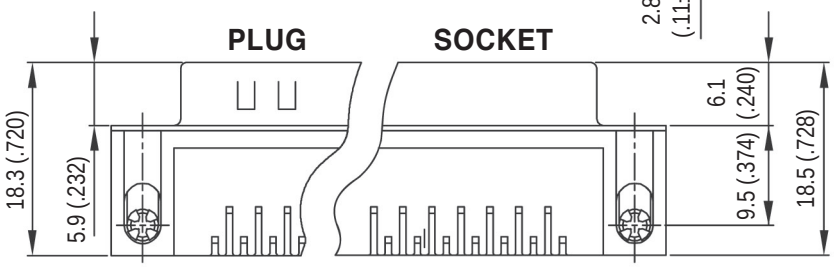

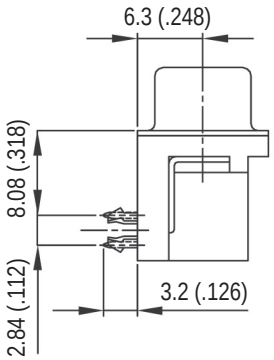

Nb OF CONTACTS	DIMENSIONS mm (inch)					
	A	B	C	D	E	F
9	30.81 (1.21)	24.99 (.98)	16.92 (.67)	16.24 (.64)	11.09 (.44)	2.74 (.108)
15	39.14 (1.54)	33.32 (1.31)	25.25 (.99)	24.56 (.97)	19.39 (.76)	2.74 (.108)
25	53.04 (2.09)	47.04 (1.85)	38.96 (1.53)	38.38 (1.51)	33.24 (1.31)	2.77 (.109)
37	69.32 (2.73)	63.50 (2.50)	55.42 (2.18)	54.76 (2.16)	49.86 (1.96)	2.77 (.109)

Recommended P.C.B.Layout

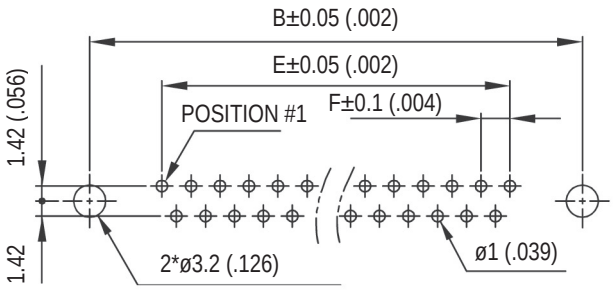

Panel mounting option

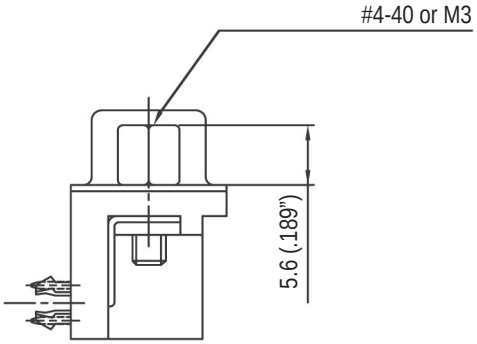

Front female screwlock
4F/3F

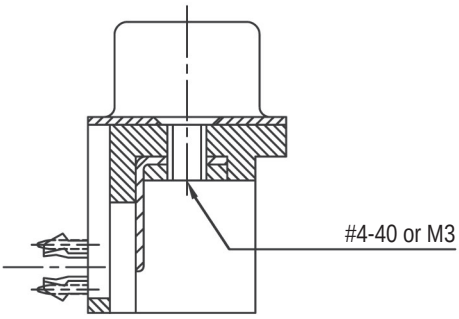

Threaded rear insert
4R/3R

How to order

L17 HT N ... ...

RoHS Compliant

Standard density

Shell size:
E = 9 ways
A = 15 ways
B = 25 ways
C = 37 ways

Contact type:
P = Plug
S = Socket

Mounting plating:
4R = Rear insert 4-40
3R = Rear insert M3
4F = Front screwlock 4-40
3F = Front screwlock M3

Options:
O = Open back side
no digit = Closed back side

Packaging:
C = Carton boxes
T = Plastic tubes

Contact plating:
1 = Gold flash
2 = 0.4µm (15µ")
4 = 0.76µm (30µ")

For special request, please consult factory

D-DF

D-Sub connectors - Screw-machined Contacts

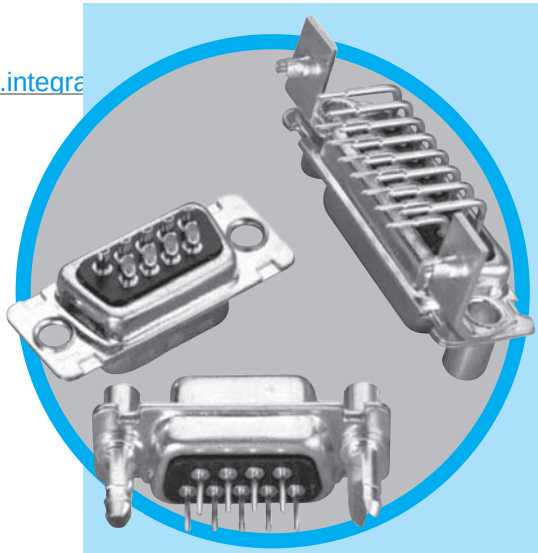

FIXED MACHINED CONTACT CONNECTOR

CHARACTERISTICS

Specifications

• Connectors according to MIL C24308 - NFC93425-HE5

Materials and Platings	
Shells	Steel tinned with dimples on plug connector
Insulator	Glass-filled thermoplastic, UL 94V-0
Rear insert	Brass, 3µm up to 5µm (118µ"up to 197µ") tinned over nickel 2µm up to 3µm (78µ" up to 118µ")
Boardlock	Tin plating 4µm up to 6µm (157µ" up to 236µ") over nickel 2µm up to 3µm (78µ" up to 118µ")
Screwlock	Brass, 6µm up to 10µm (236µ" up to 394µ") tinned over nickel 2µm up to 3µm (78µ" up to 118µ")
Contacts	**D:** brass **DF:** pin = brass socket = copper alloy **Right angle version:** full gold plating over 2µm to 3µm nickel **Straight version:** full gold plating over 2µm up to 3µm (78µ" up to 118µ") nickel

Electrical Data	
Current rating	7.5A
Voltage rating	300V AC/rms 50Hz
Withstanding voltage	1000V AC/rms 50Hz for one minute
Insulation resistance	5000MΩ
Contact resistance	**D:** 8.5mΩ max **DF:** 5mΩ max

Climatic Data	
Operating temperature	**D / DF:** -55°C to + 125°C
Salt spray	48 hours
Humidity	**D:** 21 days (40˚C - 95% HR) **DF:** 56 days (40˚C - 95% HR)

Mechanical Data

Mating and unmating force
Unit: kg (lb)

No. of Cts	Mate (max)	Unmate (min)
9 (size E)	3.05 (6.74)	0.36 (0.79)
15 (size A)	5.09 (11.24)	0.46 (1.01)
25 (size B)	8.44 (18.66)	0.81 (1.8)
37 (size C)	12.51 (27.65)	1.1 (2.47)
50 (size D)	14.65 (32.38)	1.6 (3.56)

DESCRIPTION

Amphenol's 17D and 17DF series fixed contact D-Subminiature connector is suitable for industrial or telecom use.

The machined contact provide stability and reliability.

This series offers the broadest range of termination options in the Amphenol line.

Connectors for industrial and telecom use

APPLICATIONS

- Medical
- Industrial
- Telecom
- Any industry standard I / O connections

D-DF / E18

Amphenol RoHS Compliant EU 2002/95/EC

OVERALL DIMENSIONS

Shell size dimensions

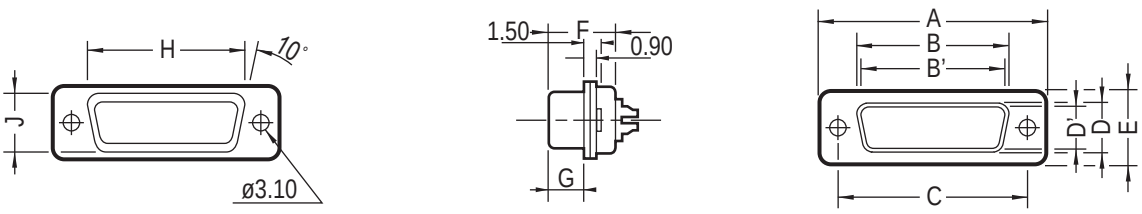

Shell size	Contact P: Pin S: Socket	A ±0.25 (±.010)	B 0/-0.20 (0/-.008)	B' +0.20/0 (+.008/0)	C ±0.10 (±.004)	D 0/-0.25 (0/-.010)	D' +0.25/0 (+.010/0)	E ±0.20 (±.008)	F +0.05/-0.20 (+.002/-.008)	F' +0.10/-0.20 (+.004/-.008)	G +0.10/-0.20 (+.004/-.008)	G' ±0.10 (±.004)	H +0.10/-0.40 (+.004/-.016)	J 0/-0.50 (0/-.020)
E	P	30.7 (1.209")		16.8 (.661")	25.0 (.984")		8.2 (.323")	12.4 (.488")		10.9 (.429")		5.9 (.232")	19.4 (.764")	11.0 (.433")
	S		16.4 (.646")			8.0 (.315")			11.1 (.437)		6.2 (.244")			
A	P	39.0 (1.535")		25.1 (.988")	33.3 (1.311")		8.2 (.323")	12.4 (.488")		10.9 (.429")		5.9 (.232")	27.7 (1.091")	11.0 (.433")
	S		24.8 (.976")			8.0 (.315")			11.1 (.437)		6.2 (.244")			
B	P	52.9 (2.083")		38.8 (1.528")	47.0 (1.850")		8.2 (.323")	12.4 (.488")		11.0 (.433")		5.8 (.228")	41.4 (1.630")	11.0 (.433")
	S		38.5 (1.513")			8.0 (.315")			11.1 (.437)		6.2 (.244")			
C	P	69.2 (2.724")		55.3 (2.177")	63.5 (2.500")		8.2 (.323")	12.4 (.488")		11.0 (.433")		5.8 (.228")	57.9 (2.280")	11.0 (.433")
	S		54.9 (2.161")			8.0 (.315")			11.1 (.437)		6.2 (.244")			
D	P	66.8 (2.630")		52.7 (2.075")	61.1 (2.406")		11.0 (.433")	15.2 (.598")		11.0 (.433")		5.8 (.228")	55.5 (2.185")	13.8 (.543")
	S		52.5 (2.067")			10.9 (.429")			11.1 (.437)		6.2 (.244")			

Panel cutouts

Optimal cutout for rear mounting

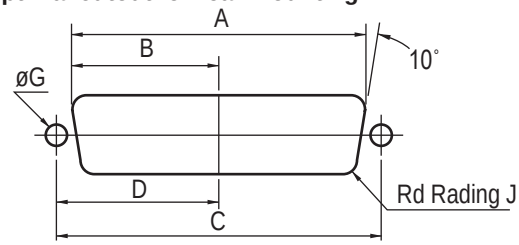

Standard cutout

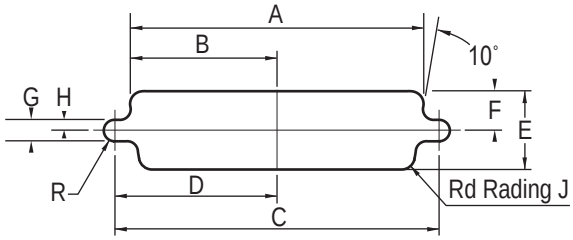

Shell size	Mounting method	A ±0.20 (±.008)	B ±0.20 (±.008)	C ±0.20 (±.008)	D ±0.20 (±.008)	E ±0.20 (±.008)	F ±0.20 (±.008)	G ±0.20 (±.008)	H ±0.20 (±.008)	J ±0.20 (±.008)
E	Front	22.2 (.874")	11.1 (.437")	25.0 (.984")	12.5 (.492")	13.0 (.512")	6.5 (.256")	3.0 (.118")	1.5 (.059")	2.1 (.083")
	Rear	20.5 (.807")	10.2 (.402")			11.4 (.449")	5.7 (.224")			3.4 (.0134")
A	Front	30.5 (1.201")	15.3 (.602")	33.3 (1.311")	16.7 (.657")	13.0 (.512")	6.5 (.256")	3.0 (.118")	1.5 (.059")	2.1 (.083")
	Rear	28.8 (1.134")	14.4 (.567")			11.4 (.449")	5.7 (.224")			3.4 (.0134")
B	Front	44.3 (1.744")	22.1 (.870")	47.0 (1.850")	23.5 (.925")	13.0 (.512")	6.5 (.256")	3.0 (.118")	1.5 (.059")	2.1 (.083")
	Rear	42.5 (1.673")	21.3 (.839")			11.4 (.449")	5.7 (.224")			3.4 (.0134")
C	Front	60.7 (2.390")	30.4 (1.197")	63.5 (2.500")	31.7 (1.248")	13.0 (.512")	6.5 (.256")	3.0 (.118")	1.5 (.059")	2.1 (.083")
	Rear	59.1 (2.327")	29.5 (1.161")			11.4 (.449")	5.7 (.224")			3.4 (.0134")
D	Front	58.3 (2.295")	29.2 (1.150")	61.1 (2.406")	30.6 (1.205")	15.8 (.622")	7.9 (.311")	3.0 (.118")	1.5 (.059")	2.1 (.083")
	Rear	56.3 (2.217")	28.2 (1.110")			14.1 (.555")	7.1 (.280")			3.4 (.0134")

Termination

Right angle

MIL Footprint

without bracket:

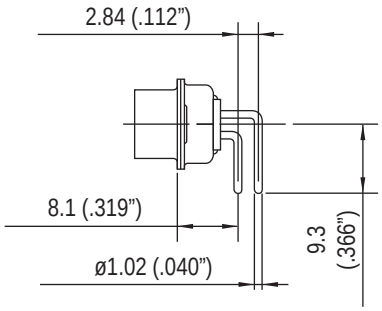

C

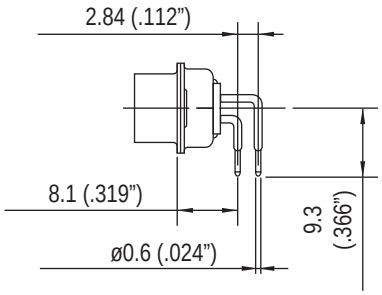

A4

plastic bracket:

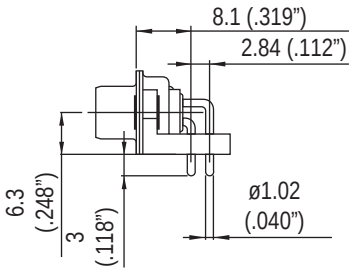

AJ3

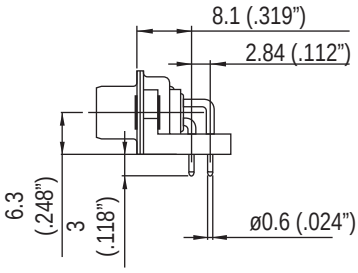

AJ4

metal bracket:

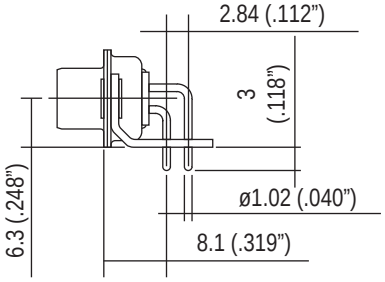

A

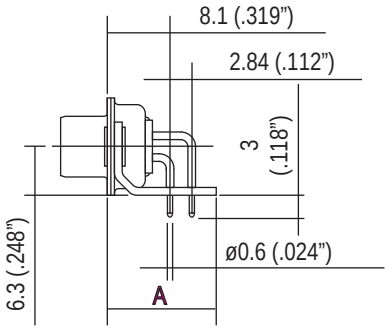

AM4: A=13.2mm
AZ4: A=11.5mm

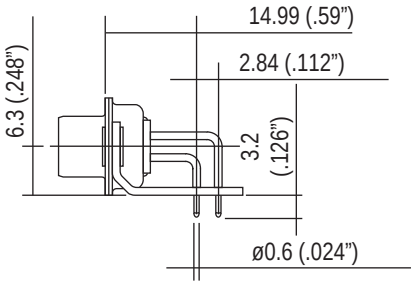

AM4B

50 contacts:

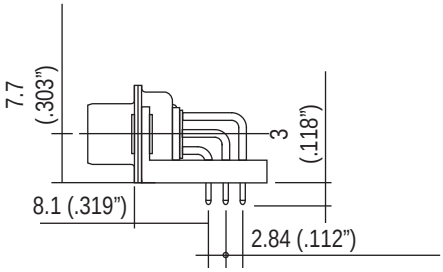

Termination

European footprint

without bracket:

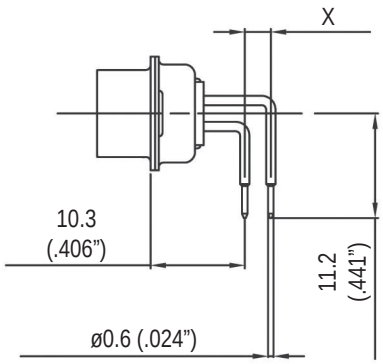

1AON: X=2.54mm
1BON: X=2.84mm

plastic bracket:

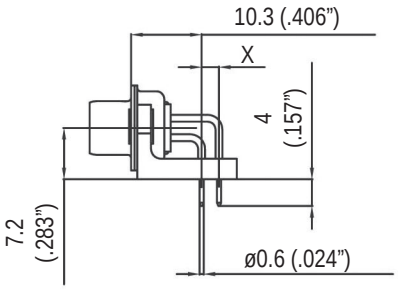

1APN: X=2.54mm
1BPN: X=2.84mm

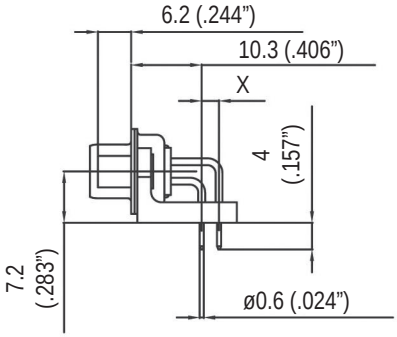

1AUN: X=2.54mm
1BUN: X=2.84mm

metal bracket:

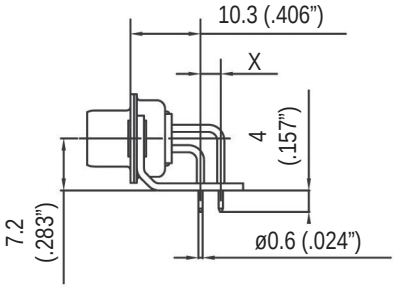

1AMN: X=2.54mm
1BMN: X=2.84mm

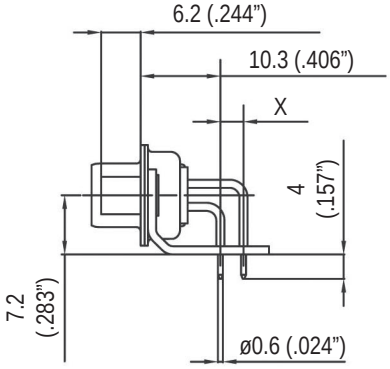

1ATN: X=2.54mm
1BTN: X=2.84mm

50 contacts:

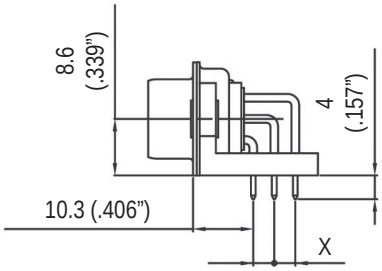

Termination

Solder Cup:

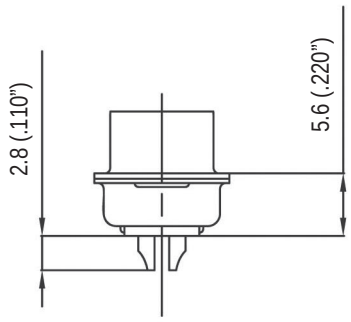

Wire Wrap:

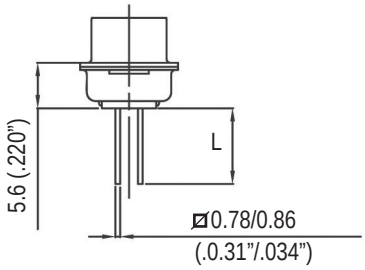

termination	Nb of wraps	L
F179	2	9.6mm (.378")
F179A	3	13mm (.512")

Straight PCB:

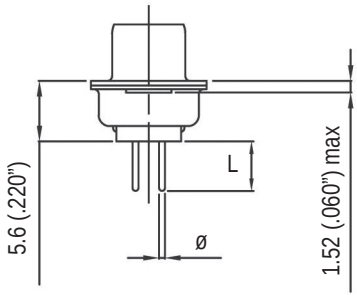

termination	Ø	L
U	0.6mm (.024")	3.2mm (.126")
V	1.02mm (.040")	2.4mm (.095")
T	0.6mm (.024")	4mm (.157")
OL2	0.6mm (.024")	5.5mm (.217")

Grounding tabs:

For straight termination

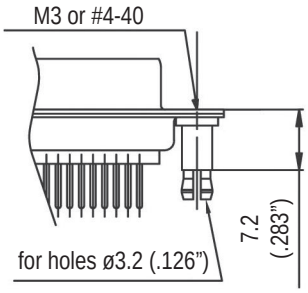

RM5

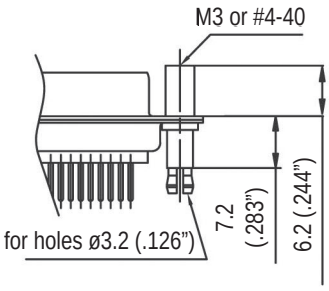

RM8

For R/A termination

FOR PCB 1.6

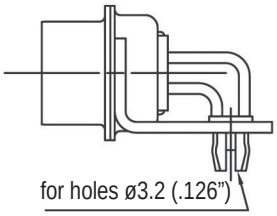

RM6

Panel mounting option

For straight and R/A termination

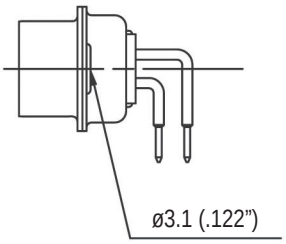

Standard rivet 3.1mm
no digit

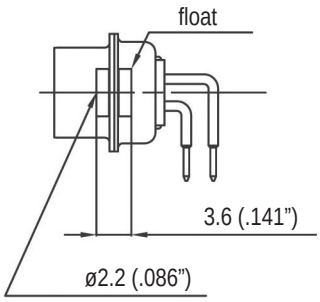

Float mounting
F

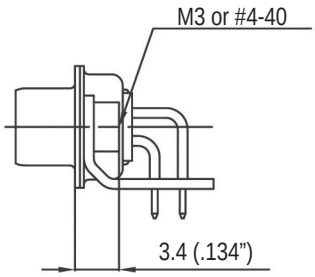

Threaded rear insert
H / G

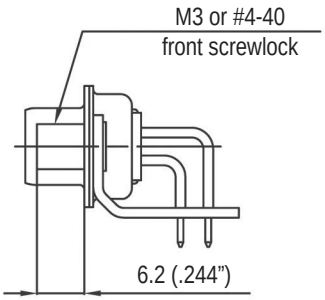

Fixed front female screwlock
VF / VFM

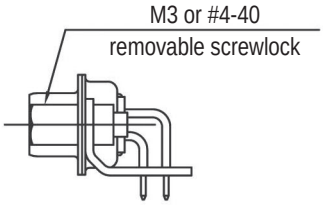

Removable female screwlock
VF2 / VFM2

Recommended PCB Layout

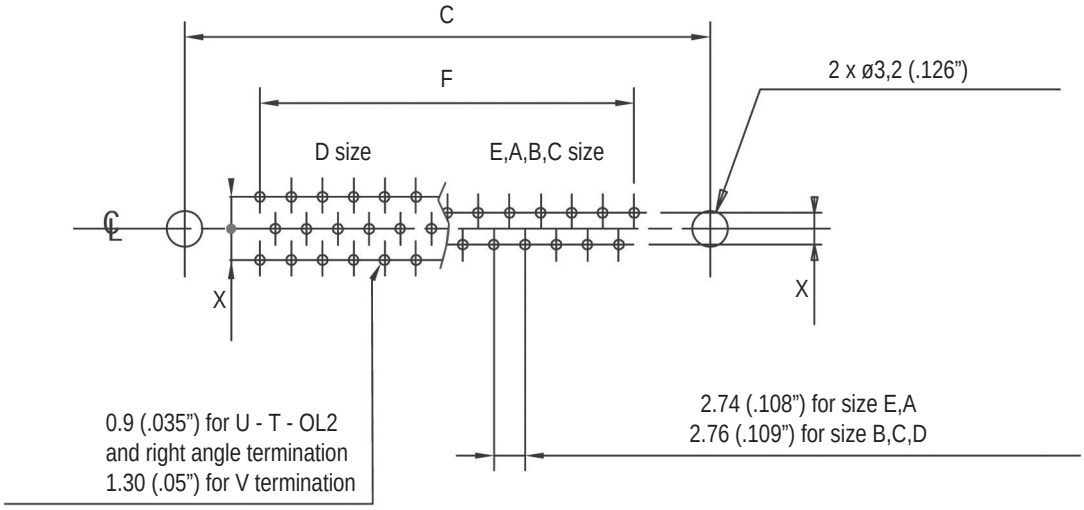

For straight PCB: X = 2.84mm (.112")

For right angle PCB: MIL: X = 2.84mm (.112")
European: X = 2.54mm (.100"), 2.84mm in option

	size E	size A	size B	size C	size D
C±0,1 (.004)	25 (.984)	33.3 (1.311)	47 (1.85)	63.5 (2.5)	61.1 (2.406)
F±0,05 (.002)	10.96 (.431)	19.18 (.755)	33.12 (1.304)	49.68 (1.956)	44.2 (1.74)

How to order

L ....

RoHS Compliant

for specific product

0.2µm (8µ")	**77D:** tinned shell for receptacle **717D:** tinned shell + dimples for plug
0.5µm (20µ")	**77DF or 177D:** tinned shell for receptacle **717DF or 777D:** tinned shell + dimples for plug
0.76µm (30µ")	**177DF :** tinned shell for receptacle **777DF :** tinned shell + dimples for plug

shell size: E,A,B,C, D

mounting options:
H = rear insert 4-40
G = rear insert M3
F = float mounting
no digit = standard rivet ø3.1mm
***H, G** must also be used to specify the threading of RM5 grounding tabs.

configuration: 09,15,25,37, 50

contact type:
P = pin
S = socket

grounding tabs:
RM5 = for straight PCB mounting*
RM8 = for straight PCB mounting + female lock
RM6 = for right angle PCB mounting
VF = front screwlock 4-40
VFM = front screwlock M3
VF2 = removable screwlock 4-40
VFM2 = removable screwlock M3

termination:
-solder cup: no digit

-wire wrap:
F179 = length 9.6mm
F179A = length 13mm

-straight PCB:
U = length 3.2mm, tail ø0.6mm
V = length 2.4mm, tail ø1.02mm
T = length 4mm, tail ø0.6mm
OL2 = length 5.5mm, tail ø0.6mm

-right angle connector:

MIL footprint

without bracket: **C** = tail ø1.02mm
A4 = tail ø0.6mm
plastic bracket: **AJ3** = tail ø1.02mm
AJ4 = tail ø0.6mm
metal bracket: **A** = tail ø1.02mm
AM4 = A = 13.2mm
AZ4 = A = 11.5mm
AM4B = footprint 14.99mm (.590")

European footprint

without bracket: **1AON** = X = 2.54mm
1BON = X = 2.84mm
plastic bracket: **1APN** = X = 2.54mm
1BPN = X = 2.84mm
1AUN = X = 2.54mm
1BUN = X = 2.84mm
metal bracket: **1AMN** = X = 2.54mm
1BMN = X = 2.84mm
1ATN = X = 2.54mm
1BTN = X = 2.84mm

: Standard options

For special request, please consult factory

HD

D-Sub connectors - Stamped and Formed Contacts

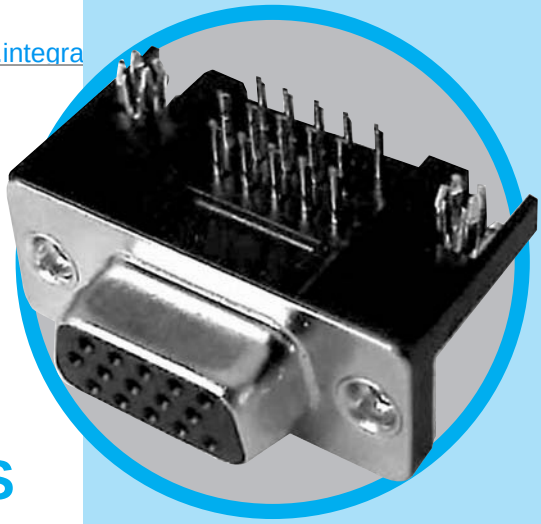

RIGHT ANGLE HIGH DENSITY CONNECTORS

MAIN CHARACTERISTICS

Specifications

- **Connectors according to: MIL C24308**

Materials and Platings	
Shells	Steel, tin over nickel plating
Body	Glass filled thermoplastic, UL 94V-0
Contacts	Copper alloy, selective gold plating
Rear insert	Brass with nickel plating
Screwlock	Brass with nickel plating
Grounding clip	Copper alloy with tin plating

Electrical Data	
Current rating	3A
Voltage rating	300V AC/rms 50Hz
Withstanding voltage	1000V AC/rms 50HZ for one minute
Insulation resistance	5000MΩ
Contact resistance	10mΩ Max.

Climatic Data	
Operating temperature	-55°C to +125°C

Mechanical Data

Mating and unmating force
Unit: kg (lb)

No. of Cts	Mate (max)	Unmate (min)
15	3.81 (8.42)	0.52 (1.14)
26	5.95 (13.16)	1.05 (2.32)
44	9.26 (20.46)	1.37 (3.02)
62	13.48 (29.78)	1.76 (3.88)

Standard plating thickness
- gold flash
- 0.4µm (15µ") gold
- 0.76µm (30µ") gold

DESCRIPTION

Amphenol's high density D-Sub connectors complement Amphenol's extensive D-Sub connector line. This line offers many superior features, high performance level and low installation cost.

The decreased contact spacing accommodates greater signal density in comparison to conventional D-Sub connectors.

Economical right angle PCB

APPLICATIONS

- Industrial
- Telecom
- Any industry standard I / O connections

HD / E19

Amphenol RoHS Compliant EU 2002/95/EC

P.C.B. Layout

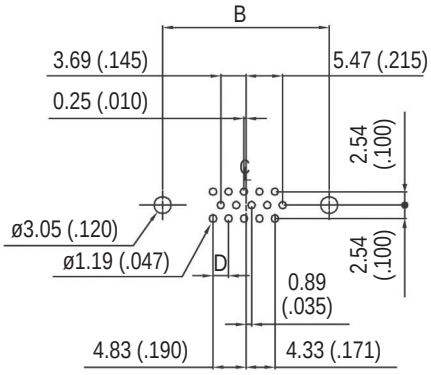

15 PIN

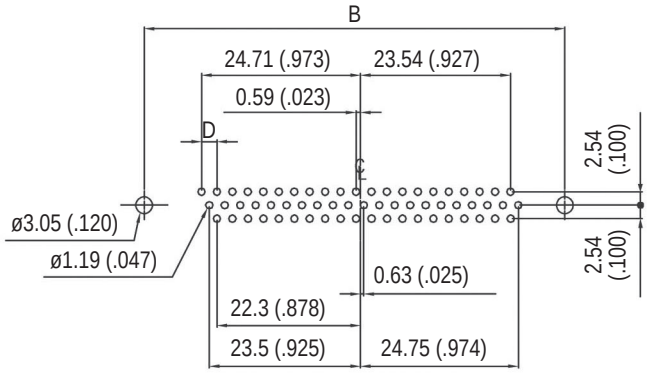

62 PIN

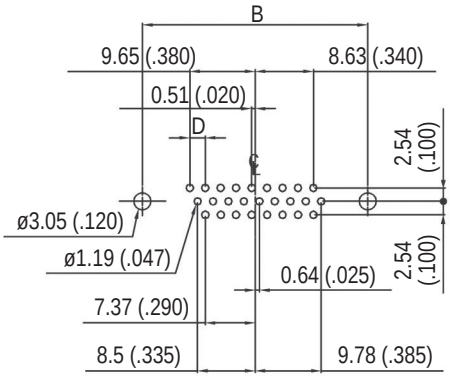

26 PIN

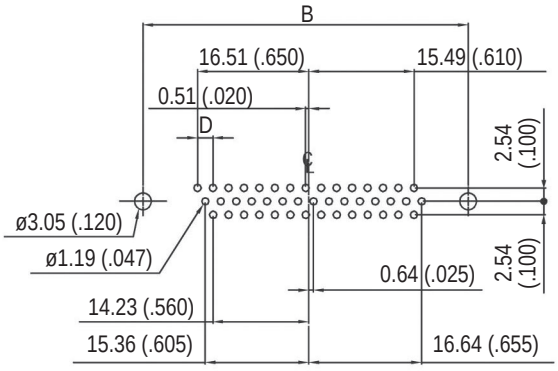

44 PIN

Panel mounting option

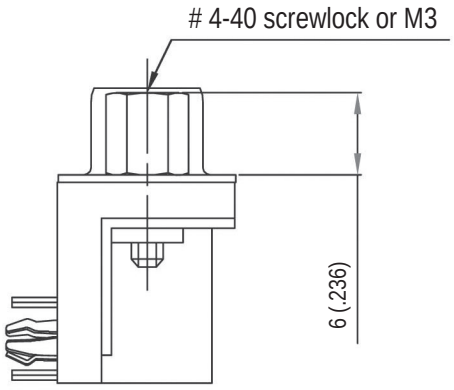

Front female screwlock

4F / 3F

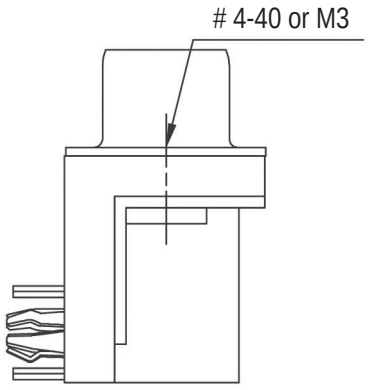

Threaded rear insert

4R / 3R

OVERALL DIMENSIONS

Shell size dimensions

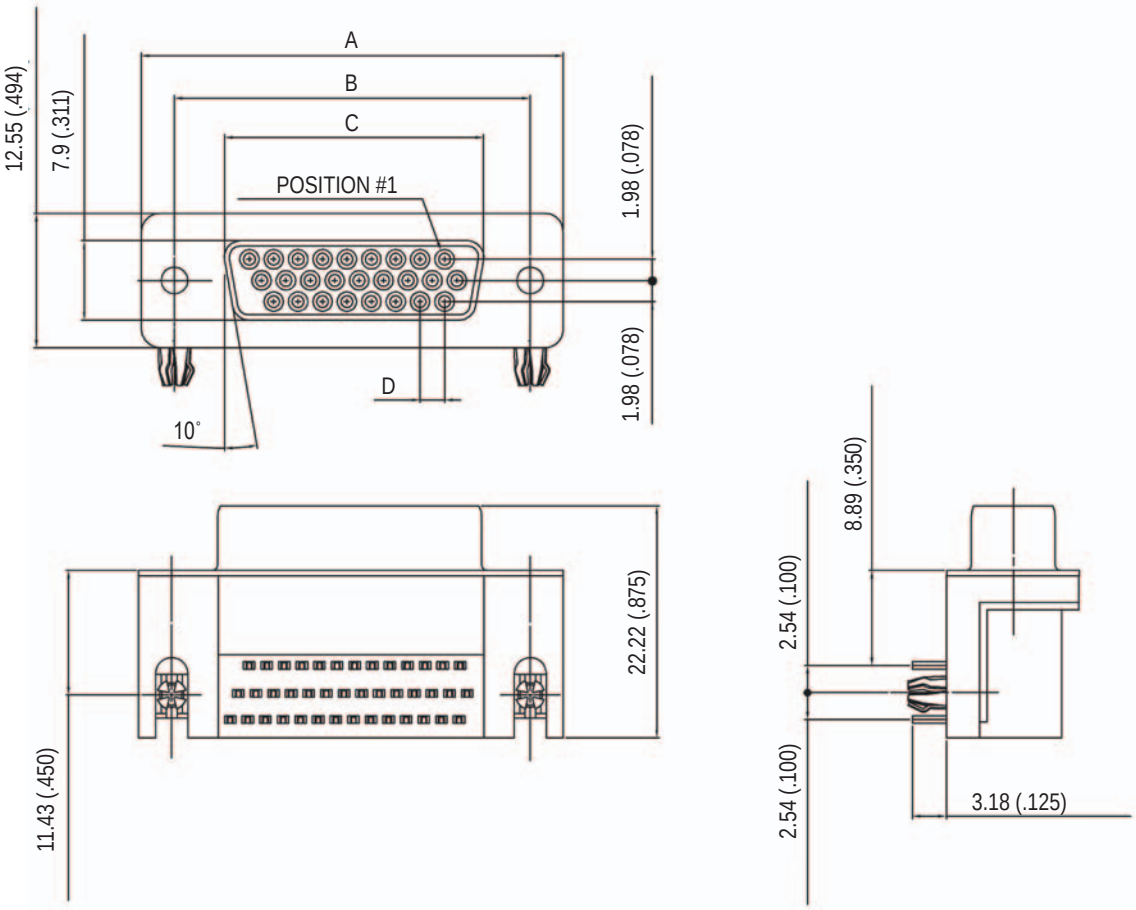

NB OF CONTACTS	DIMENSIONS mm (inch)			
	A	B	C	D
15	30.84 (1.214)	24.99 (.984)	16.26 (.640)	2.29 (.090)
26	39.24 (1.545)	33.32 (1.312)	24.56 (.967)	2.29 (.090)
44	53.04 (2.088)	47.04 (1.852)	38.30 (1.508)	2.29 (.090)
62	69.34 (2.730)	63.50 (2.500)	54.76 (2.156)	2.41 (.095)

TECHNICAL DATA

How to order

L … HD … … … CH … C309

RoHS Compliant

gold flash	77: tinned shell for receptable 717: tinned shell + dimples for plug
0.4µm (15µ")	177: tinned shell for receptable 777: tinned shell + dimples for plug

configuration: E15, A26, B44, C62

contact type:
P = Pin
S = Socket

plating option valid only for 0.76µm (30µ")
part numbers must be written as follow:
77HD.....C309
or
717HD.....C309

mounting options:
4R = rear insert 4-40
4F = front screwlock 4-40
3R = rear insert M3
3F = front screwlock M3

PCB locking type:
grounding tabs + boardlocks

Footprint:
D0 : 1.50mm
D1 : 8.89mm
D2 : 5.08mm
D3 : 2.50mm

For special request, please consult factory

Do not hesitate to contact us for further information

Amphenol
Amphenol IT & Communication Products
Block A3/A4, The 4th Industrial District of
Industrial Headquarters, Dong Keng Road
Gong Ming Town, Shen Zhen China
Fax:+86(0)755 2754 9955
Technical Support

he information given in this document are as a guideline only. We reserve the right to modify our products in any way we deem necessary. Any duplication is prohibited, unless approved in writing.

G517-A

D-Sub connectors - Stamped and Formed Contacts

GENDER CHANGER

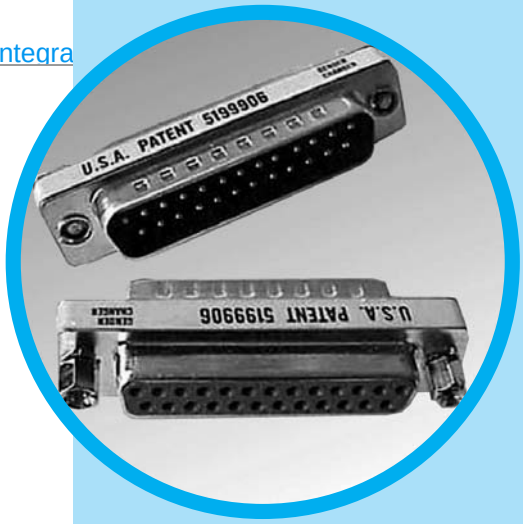

CHARACTERISTICS

Specifications

• Connectors according to MIL C24308

	Materials and Platings
Shells	Steel, 2.54µm (100µ") tin over 1.27µm (50µ") nickel plated
Insulator	Glass-filled nylon, UL 94V-0
Pin contacts	Brass, gold plated over 1.27µm (50µ") nickel
Screwlock	Brass, 2.54µm (100µ") min. nickel plated

	Electrical Data
Current rating	5A
Voltage rating	250V AC/rms 60Hz
Withstanding voltage	1000V AC/rms 60Hz for one minute
Insulation resistance	1000MΩ
Contact resistance	20mΩ max

	Climatic Data
Operating temperature	-55°C to +105°C

DESCRIPTION

These connectors allow you to change the gender of your cable assembly, and or panel D-Sub connectors.

This series gives you Amphenol's high standards of quality and reliability to meet all of your commercial requirements.

Economical gender changer D-Sub's

APPLICATIONS

- Industrial
- Telecom
- Any industry standard I / O connections

G517-A / E20

Amphenol RoHS Compliant EU 2002/95/EC

Shell size dimensions

Male to male adaptor

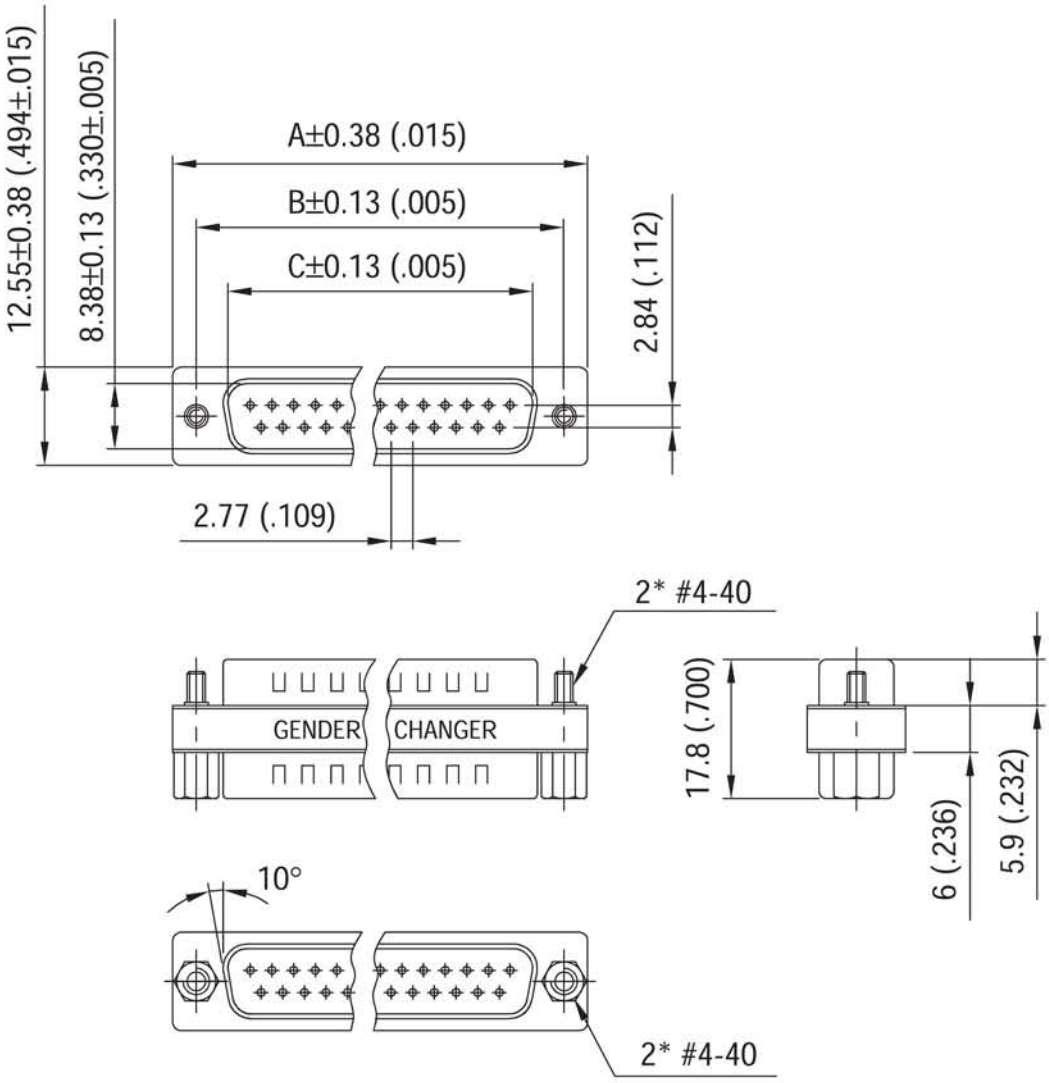

PAPT NUMBER	Nb OF CONTACTS	DIMENSIONS mm (inch)		
		A	B	C
L G517 97001	9	30.81 (1.21)	24.99 (.984)	16.92 (.666)
L G517 97002	15	39.14 (1.54)	33.32 (1.31)	25.25 (.994)
L G517 97003	25	53.04 (2.09)	47.04 (1.85)	38.96 (1.53)
L G517 97004	37	69.32 (2.73)	63.5 (2.50)	55.42 (2.18)

Shell size dimensions

Male to female adaptor

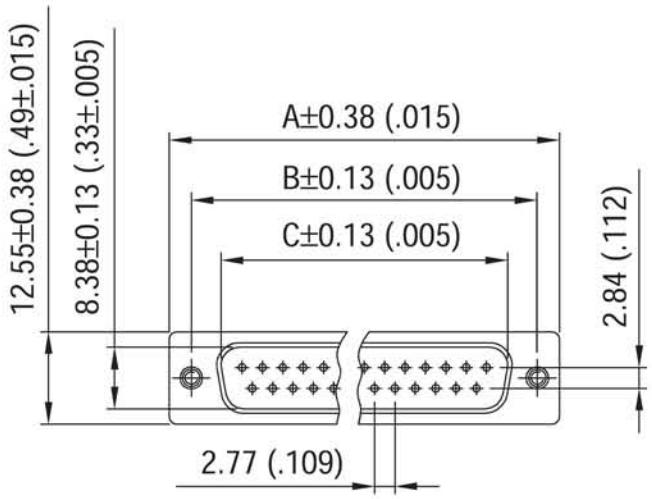

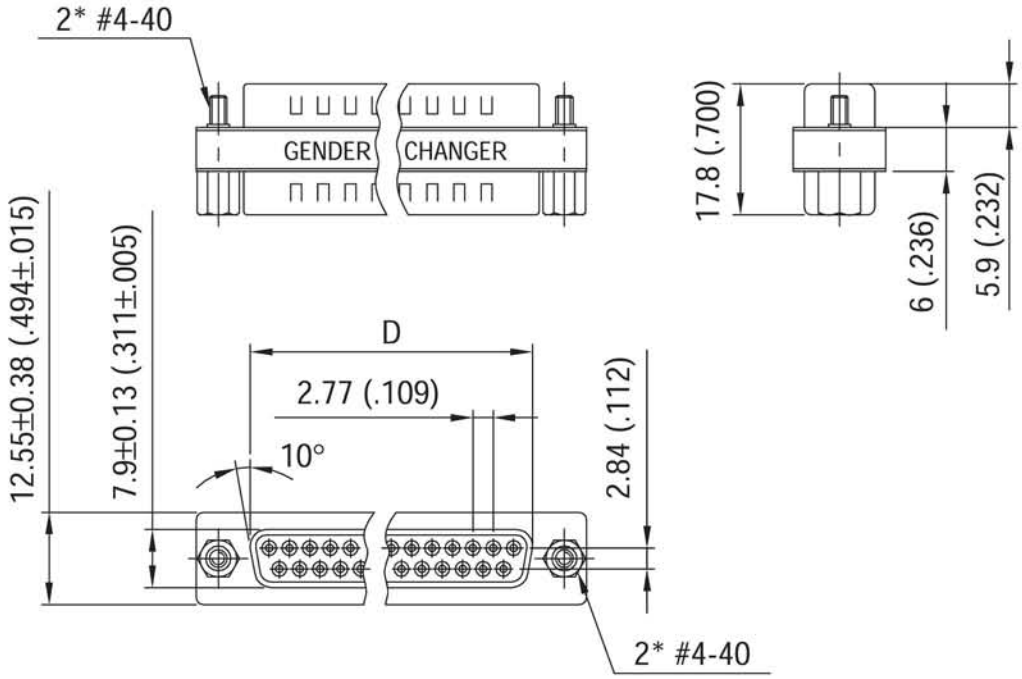

PAPT NUMBER	Nb OF CONTACTS	DIMENSIONS mm (inch)			
		A	B	C	D
L G517 97009	9	30.81 (1.21)	24.99 (.984)	16.92 (.666)	16.33 (.643)
L G517 97010	15	39.14 (1.54)	33.32 (1.31)	25.25 (.994)	24.66 (.971)
L G517 97011	25	53.04 (2.09)	47.04 (1.85)	38.96 (1.53)	38.38 (1.51)
L G517 97012	37	69.32 (2.73)	63.5 (2.50)	55.42 (2.18)	55.84 (2.20)

TECHNICAL DATA

Shell size dimensions

Female to female adaptor

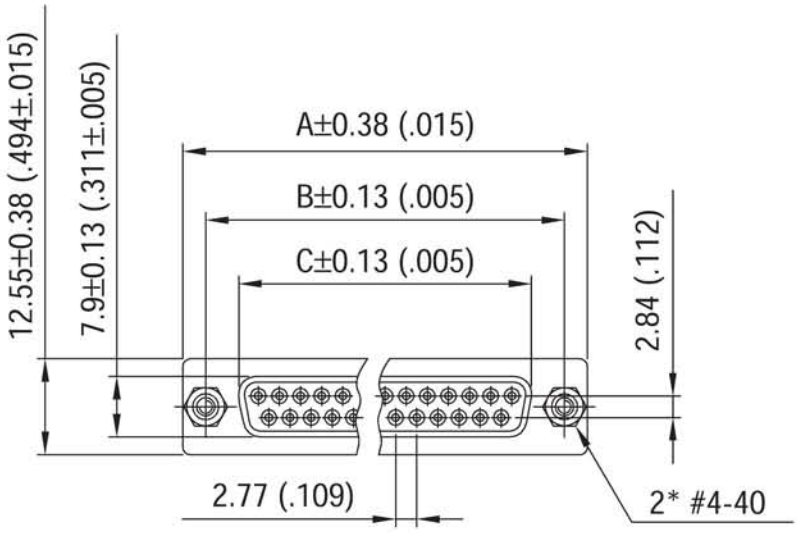

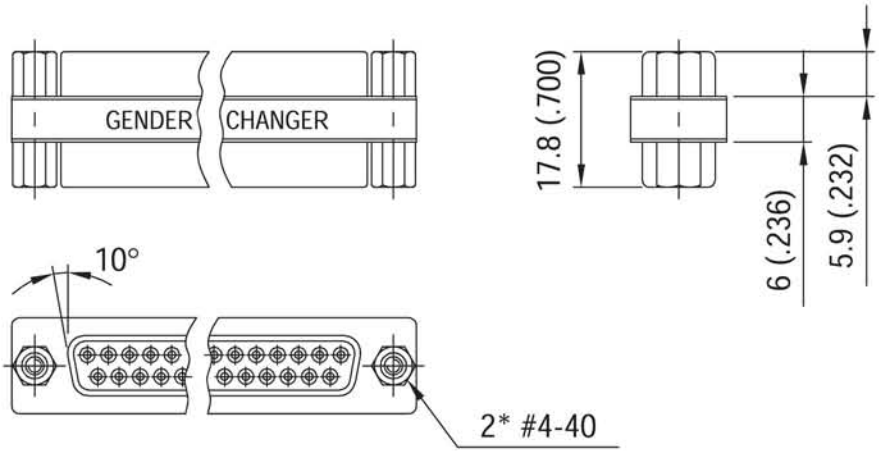

PAPT NUMBER	Nb OF CONTACTS	DIMENSIONS mm (inch)		
		A	B	C
L G517 97005	9	30.81 (1.21)	24.99 (.984)	16.33 (.643)
L G517 97006	15	39.14 (1.54)	33.32 (1.31)	24.66 (.971)
L G517 97007	25	53.04 (2.09)	47.04 (1.85)	38.38 (1.51)
L G517 97008	37	69.32 (2.73)	63.5 (2.50)	55.84 (2.20)

Do not hesitate to contact us for further information

Amphenol

Amphenol IT & Communication Products
Block A3/A4, The 4th Industrial District of
Industrial Headquarters, Dong Keng Road
Gong Ming Town, Shen Zhen China
Fax:+86(0)755 2754 9955
Technical Support

he information given in this document are as a guideline only. We reserve the right to modify our products in any way we deem necessary. Any duplication is prohibited, unless approved in writing.

G517-B

D-Sub connectors - Stamped and Formed Contacts

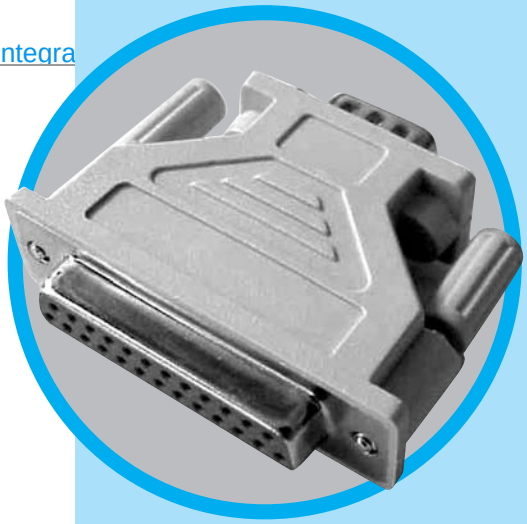

ADAPTORS D-SUB TO D-SUB 9 TO 9 AND 25 TO 25

CHARACTERISTICS

Specifications

• Connectors according to MIL C24308

	Materials and Platings
Shells	Steel, 2.54µm (100µ") tin over 1.27µm (50µ") nickel plated
Insulator	Glass-filled nylon, UL 94V-0
Pin contacts	Brass, gold plated over 1.27µm (50µ") nickel
Socket Contact	Phosphor bronze, gold plated over 1.27µm (50µ") nickel
Overmold	PVC, UL 94V-0
Screw	Brass with nickel plating

	Electrical Data
Current rating	5A
Voltage rating	250V AC/rms 60Hz
Withstanding voltage	1000V AC/rms 60Hz for one minute
Insulation resistance	1000MΩ
Contact resistance	20mΩ max

	Climatic Data
Operating temperature	-55°C to +105°C

DESCRIPTION

This series gives you Amphenol's high standards of quality and reliability to meet all of your commercial requirements.

Economical D-Sub adaptors

APPLICATIONS

- Industrial
- Telecom
- Any industry standard I / O connections

G517-B / E21

Amphenol RoHS Compliant EU 2002/95/EC

Shell size dimensions

9-position to 9-position

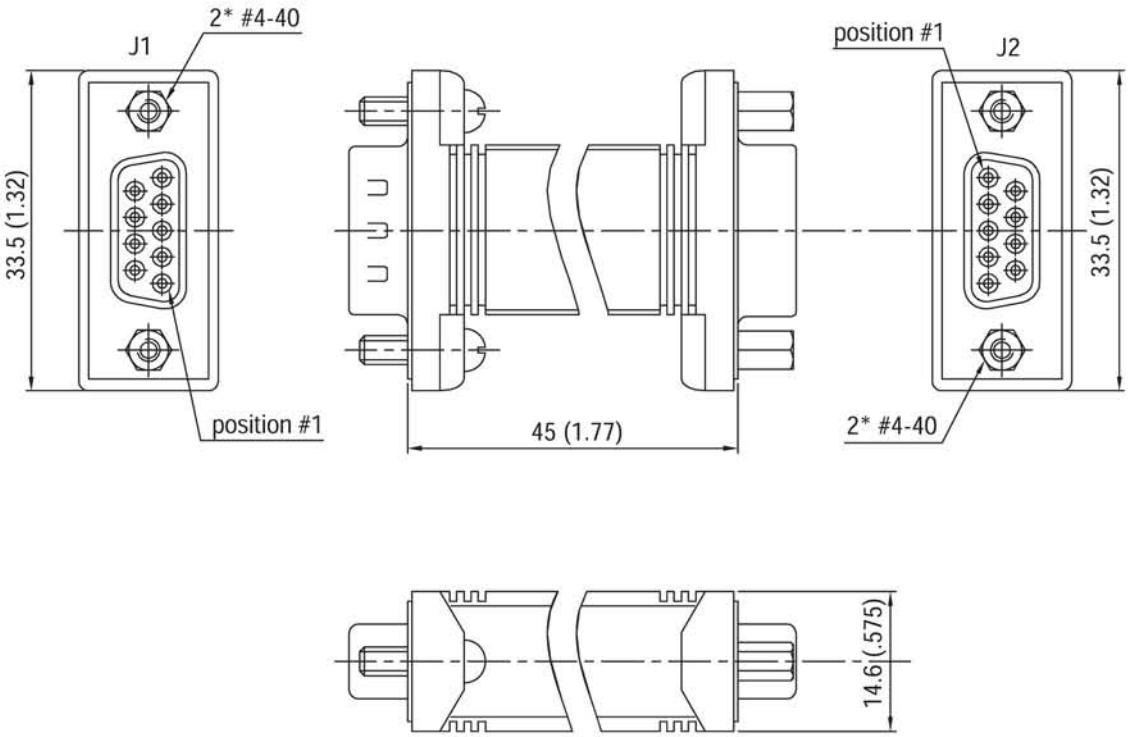

Wiring table

J1	2	3	4	5	6	7	8
J2	3	2	6	5	4	8	7

PAPT NUMBER	Description	Color
L G517 97001 L G517 97002 L G517 97015	D-Sub Male 9-pos. to D-sub Male 9-pos.	beige gray black
L G517 97016 L G517 97017 L G517 97018	D-Sub Female 9-pos. to D-sub Female 9-pos.	beige gray black
L G517 97019 L G517 97020 L G517 97021	D-Sub Male 9-pos. to D-sub Female 9-pos.	beige gray black

Shell size dimensions

25-position to 25-position

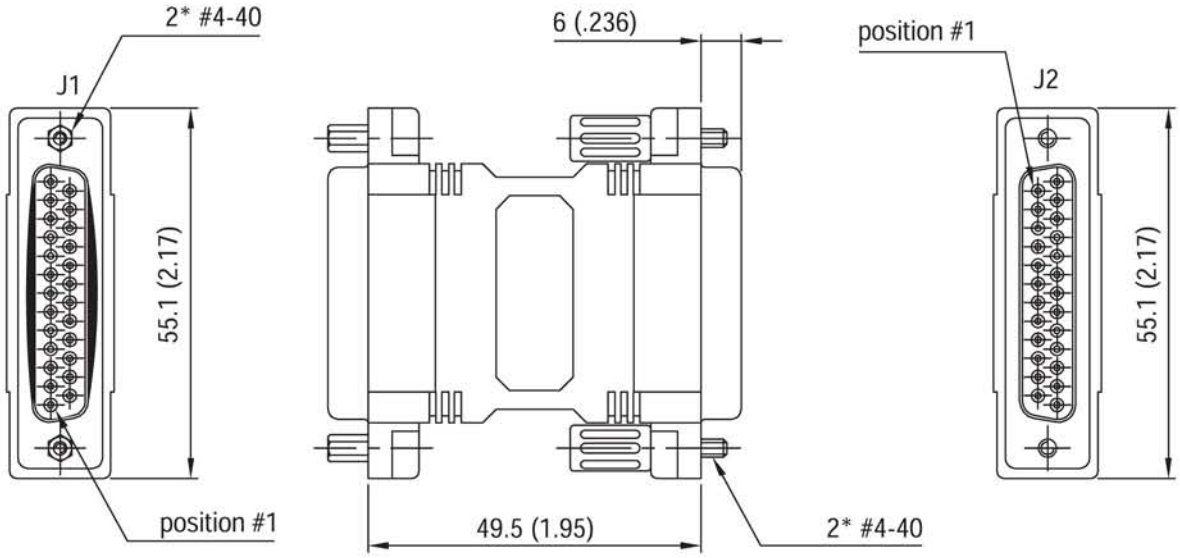

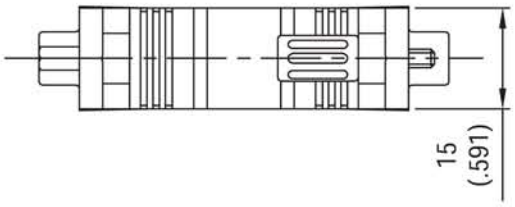

Wiring table

J1	1	2	3	4	...	24	25
J2	1	2	3	4	...	24	25

PAPT NUMBER	Description	Color
L G517 97022 L G517 97023 L G517 97024	D-Sub Male 25-pos. to D-sub Male 25-pos.	beige gray black
L G517 97025 L G517 97026 L G517 97027	D-Sub Female 25-pos. to D-sub Female 25-pos.	beige gray black
L G517 97028 L G517 97029 L G517 97030	D-Sub Male 25-pos. to D-sub Female 25-pos.	beige gray black

MP

D-Sub connectors - Stamped and Formed Contacts

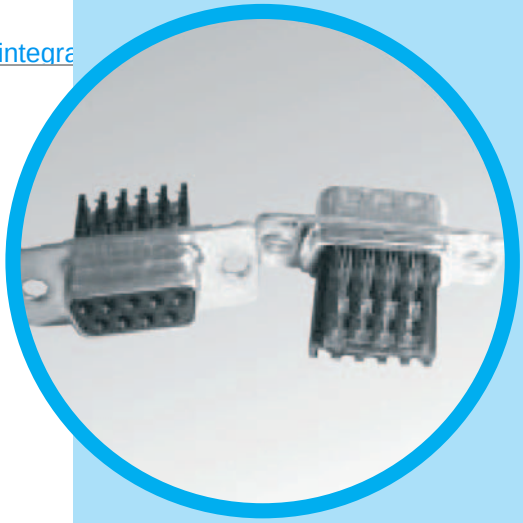

IDC DISCRETE WIRE CONNECTORS

CHARACTERISTICS

Materials and Platings	
Shells	Steel, tin over nickel
Contacts	Phosphor bronze
Plating	Contact area: gold over nickel IDC area: tin over nickel
Wire types	Solid and stranded wires AWG 24-28

Electrical Data	
Current rating	5A
Voltage rating	500V AC at sea level
Dlelectric	Thermoplastic Polyesther UL 94 VO rated

Climatic Data	
Operating temperature	-55°C to +125°C
Salt spray	24 hours

Mechanical Data	
Mating and unmating force	Size E 30 N Max. 3.5 N Mini. Size A 50 N Max. 4.5 N Mini. Size B 83 N Max. 8.0 N Mini. Size C 123 N Max. 11.0 N Mini.
Standard plating thickness	Gold flash 0.4µm (15µ") Gold 0.76 µm (30µ") Gold

DESCRIPTION

Amphenol IDC discrete D-subs offer low-profile design that accommodates many of the compact requirements of computer interfacing, instrumentation and, business equipment.
Fast, four-point solderless termination ensures reliable connections.
This series is available in 9, 15, 25, & 37 contact configurations.
Contacts, including stain relief, are easily removable in case of repair.

Simplify your cable assemblies

APPLICATIONS

- Industrial
- Telecom
- Any industry standard I / O connections

IDC / E25

Amphenol RoHS Compliant EU 2002/95/EC

Plug version

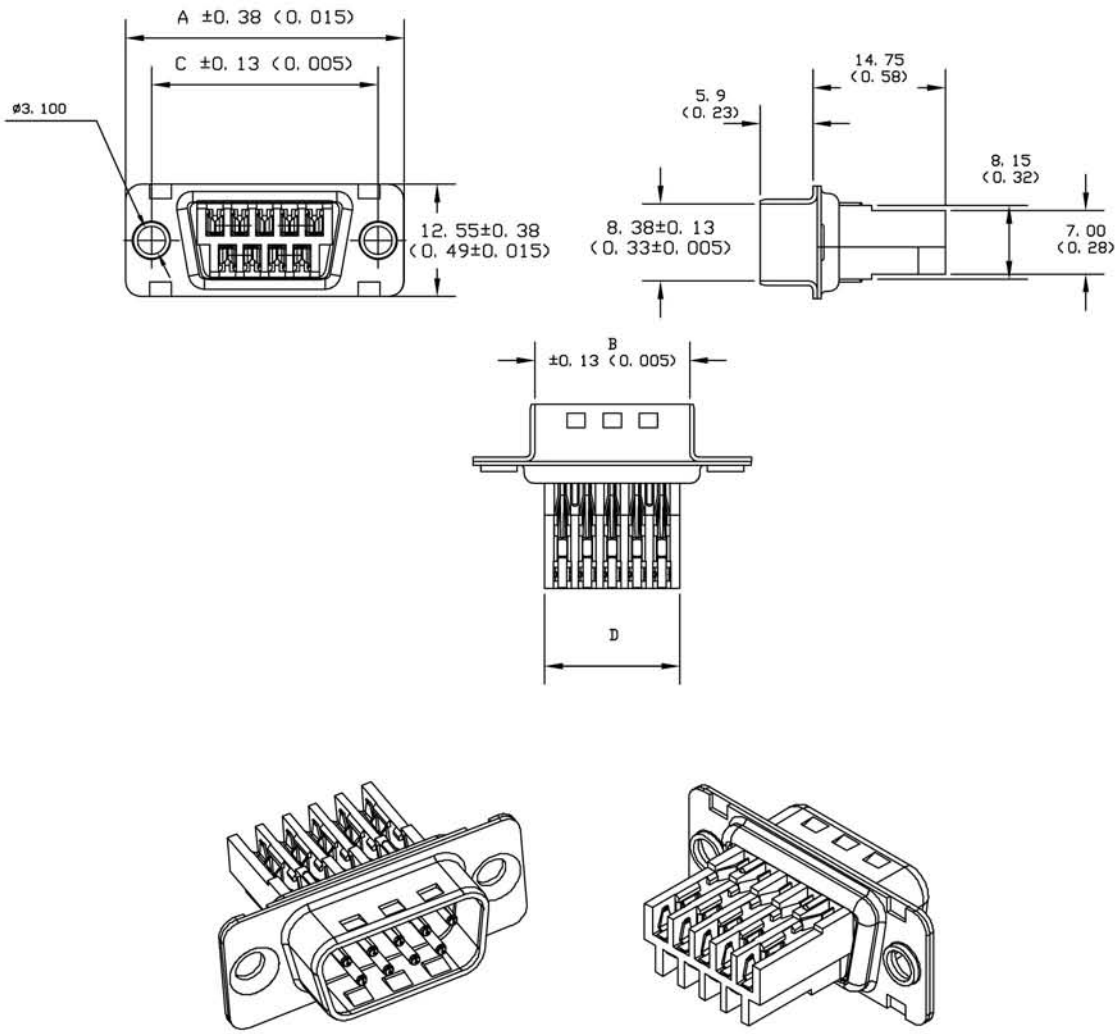

Nb OF CONTACTS	DIMENSIONS mm *(inch)*			
	A	B	C	D
9	30.81 (1.21)	16.92 (0.67)	24.99 (0.98)	14.90 (0.59)
15	39.14 (1.54)	25.25 (0.99)	33.32 (1.31)	23.00 (0.91)
25	53.04 (2.09)	38.96 (1.53)	47.04 (1.85)	36.90 (1.45)
37	69.32 (2.73)	55.42 (2.18)	63.50 (2.50)	59.30 (2.33)

OVERALL DIMENSIONS

Socket version

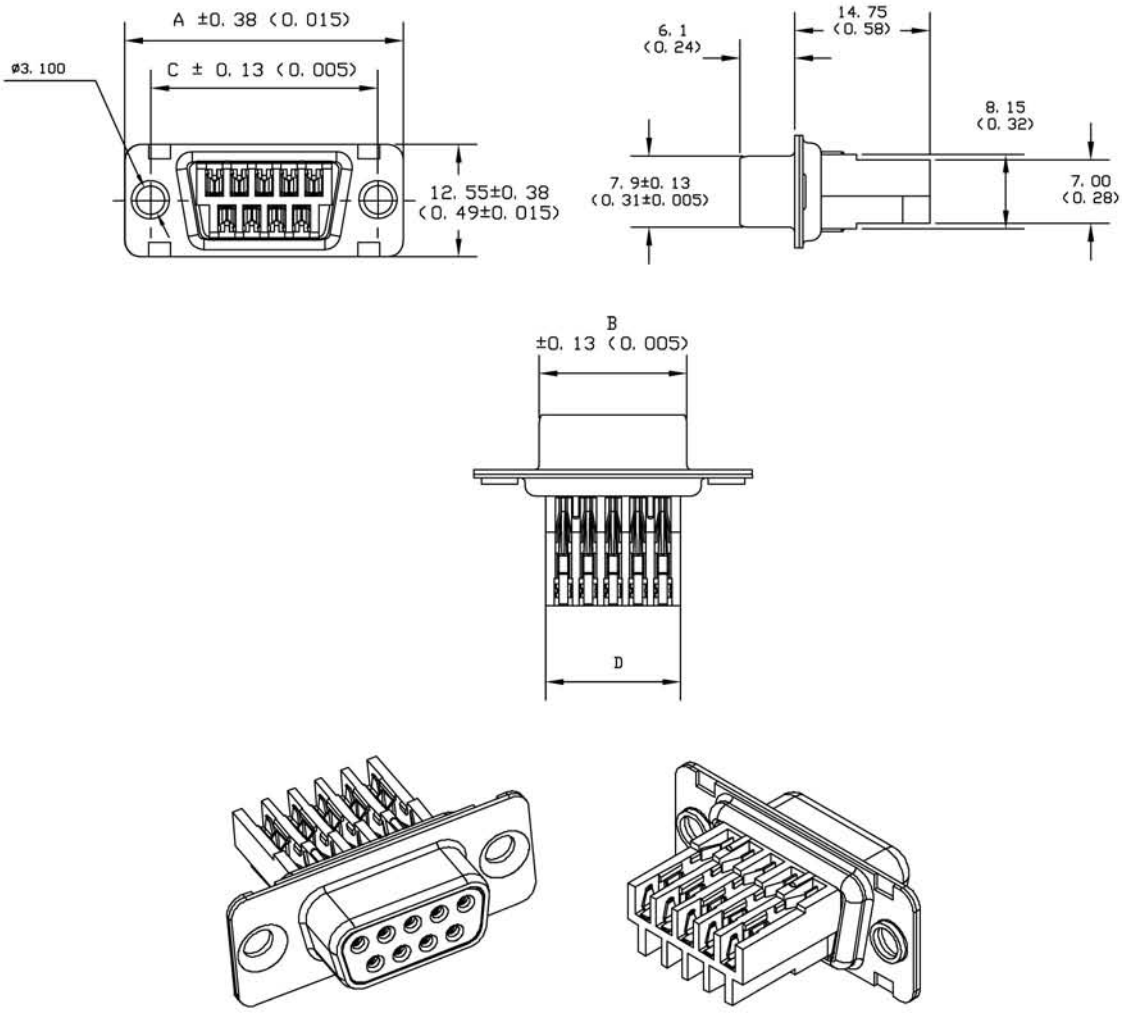

Nb OF CONTACTS	DIMENSIONS mm *(inch)*			
	A	B	C	D
9	30.81 (1.21)	16.24 (0.64)	24.99 (0.98)	14.90 (0.59)
15	39.14 (1.54)	24.56 (0.97)	33.32 (1.31)	23.00 (0.91)
25	53.04 (2.09)	38.38 (1.51)	47.04 (1.85)	36.90 (1.45)
37	69.32 (2.73)	54.76 (2.16)	63.50 (2.50)	59.30 (2.33)

Amphenol

HOW TO ORDER

Tooling for IDC connectors

Terminating frame	Ref: **21046**	
Terminating head	Ref: **976 MC**	
Connector holders references		
Number of Contacts	**Plug**	**Socket**
09	991 MC	992 MC
15	993 MC	994 MC
25	995 MC	996 MC
37	997 MC	998 MC
Hand tool	Ref: **989 MC**	Single insertion tool

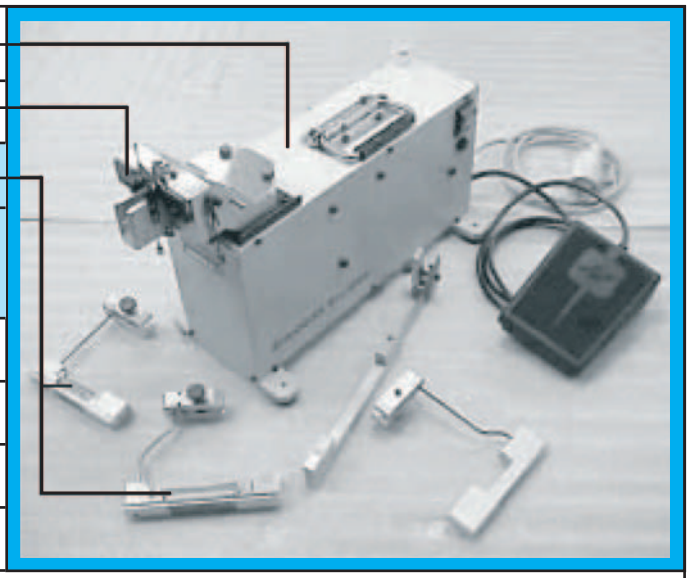

How to order

L 17MP ... ...

RoHS Compliant

IDC Series

Number of position
09 = 9 ways
15 = 15 ways
25 = 25 ways
37 = 37 ways

Contact type
0 = Socket
1 = Plug

OPTION: consult factory

Flange mounting option
0 = Clear hole ø3.1mm (.122")
1 = Rear insert # 4-40
2 = Rear insert M3
3 = Front screwlock # 4-40
4 = Front screwlock M3

Front shell plating
1 = Tinned
(plugs with dimples)

Contact plating
Selective gold plating
0 = Gold flash
1 = 0.4 µm (15µ")
2 = 0.76 µm (30µ")

Do not hesitate to contact us for further information

Amphenol

Amphenol IT & Communication Products
Block A3/A4, The 4th Industrial District of
Industrial Headquarters, Dong Keng Road
Gong Ming Town, Shen Zhen China
Fax:+86(0)755 2754 9955
Technical Support

he information given in this document are as a guideline only. We reserve the right to modify our products in any way we deem necessary. Any duplication is prohibited, unless approved in writing.

SD308

Sealed D-Sub Connectors

For Sea, Air or Land, these connectors are SEALED! Amphenol's SD308 Sealed D-Subminiature Connectors are available in the full range of standard density and hi-density insert arrangements, pin and socket contacts. These connectors are supplied with fixed screw machine contacts and are available in Solder Cup, Straight PCB, and Right Angle PCB terminations.

- Ruggedized Computers and Peripheral Equipment
- Industrial Controllers
- 21st Century Soldier
- Ideal For Retrofit Applications Or Late Design-In

Specifications:

Product Features

- One piece machined Aluminum Shell
- Gold Plated Screw Machine Contacts
- Hi Grade Thermoplastic Inserts -67°F to +257°F (-55°C to +125°C)
- Integrated Blind Panel Mounts
- Supplied with Conductive Panel Seal Gasket

Materials and Platings

Shells	Machined aluminum alloy, tin plated
Inserts	High temperature resistant polyethersulfone per mil-p-46185
Contacts	Copper alloy, 20µ" (0.51µm) gold plated over nickel.
Seal	Silicone elastomer with nickel plated graphite flake

Electrical Data

Current Rating	5A
Insulation Resistance	5 GIGOHM @ 500 VDC
Working Voltage	120 VAC
D.W.V.	1,000 VAC pin to pin & pin to shell

Climatic Data

Operating Temperature	-67°F to +257°F (-55°C to +125°C)

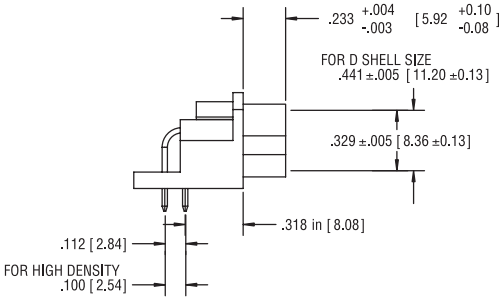

PLUG - SIDE VIEW

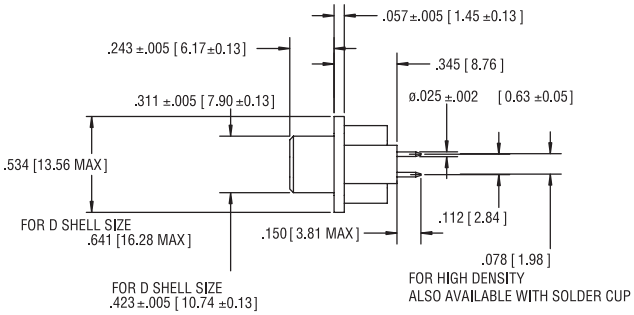

RECEPTACLE - SIDE VIEW

SD308 - E09 - S - A - 1 - 000

Series Designation

Shell Size & Number Of Contacts
STD Density E09, A15, B25, C37, D50
HIGH Density E15, A26, B44, C62, D78, 6106

Contact Type
S=Socket Contact P= Pin Contact

Termination Style
A = Right Angle pcb B = Vertical pcb
C = Solder Cup

Mounting Type
1 = 4-40 Blind Nut
2 = 4-40 Blind Nut with R/A Mounting Bracket

000 = Standard part
other deviations as required

AMPHENOL D-SUBMINIATURE

Filtered D-Sub Connectors, Ruggedized

FD308

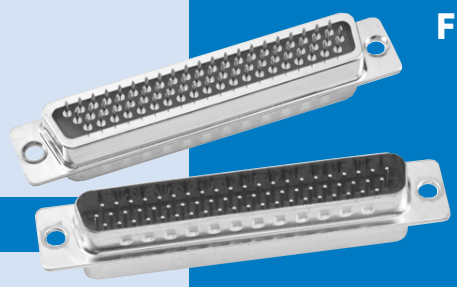

For 50 position and all high density versions. Amphenol's FD308 Filtered D-Subminiature connectors are available in the full range of hi-density insert arrangements, pin and socket contacts, plus the 50 position standard density. These connectors are supplied with fixed screw machine contacts and are available in Straight and Right Angle PCB terminations and Solder Cup.

- Computers and Peripheral Equipment
- Avionics Systems Ideal For Retrofit Applications Or Late Design-In

Specifications:

Description

- Hi reliability filtering in multi row arrangements
- Stamped and Formed shells
- Screw Machine Contacts and Hi Reliability inserts
- Available in all Hi-Density insert patterns

Materials and Platings

Shells	Stamped steel shell, tin plated
Inserts	High temperature resistant polyethersulfone per MIL-P-46185
Contacts	Machined copper alloy, 20µ" (0.51µm) gold plated over nickel
Capacitor	Barium titanate ceramic array

Electrical Data

Current Rating	5 A
Insulation Resistance	5 GIGOHM @ 500 VDC
Working Voltage	200 VDC
D.W.V.	500 VDC pin to pin & pin to shell
Capacitance	+/- 20% (see P/N description)

Climatic Data

Operating Temperature	-67°F to +257°F (-55°C to +125°C)

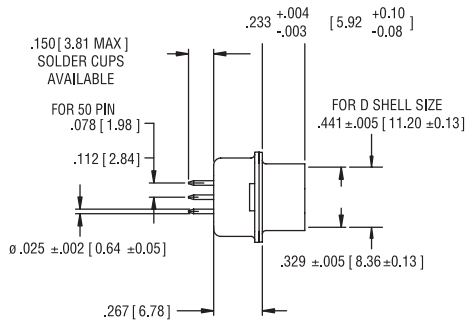

PLUG - SIDE VIEW

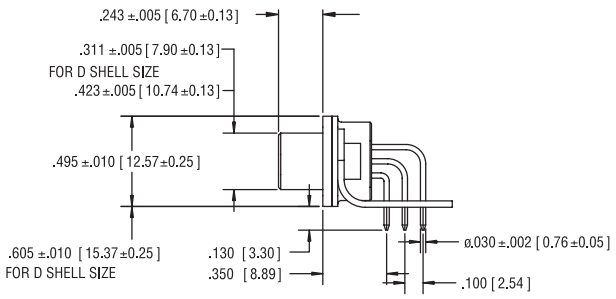

RECEPTACLE - SIDE VIEW

FD308 - B44 - S - A - 1 - A2 - 000

Series Designation

Size & Number Of Contacts
STD Density E09, A15, B25, C37, D50
High Density E15, A26, B44, C62, D78, 6104

Contact Type
S = Socket Contact P = Pin Contact

Termination Style
A = Right Angle pcb
B = Vertical pcb
C = Solder Cup

Mounting Type
1 = 4-40 Clinch Nut
2 = Ø.120 (3.05) Hole
3 = R/A Mounting Bracket
4 = 4-40 Clinch Nut with R/A Mounting Bracket

Capacitance Code
A2 = 200 PF 02 = 2000 PF
A4 = 400 PF 05 = 5000 PF
01 = 1000 PF

000 = Standard part other deviations as required

Telephone: (416) 754-5656 Fax: (416) 754-8668 E-Mail: sales@amphenolcanada.com

Ordering Information - IDC

FCC17 - E09 - S - W - 4 - 8 - 0 - G

Series Designation

Size and Configuration
15 & 25 Size Consult Factory.

Connector Type
S: Socket P: Pin Consult Factory.

Termination Type
W: IDC *

Mounting
2: .120 (3.05) Diameter Through Hole
4: 4-40 Threaded Inserts
6: M3 Threaded Inserts

Special
G: 50 Micro Inches Gold

Modifier
0: Standard Product
x: Special or Custom Versions

Capacitance Value

D:	50 pF	5:	1,000 pF
0:	180 pF	E:	2,200 pF
F:	330 pF	9:	5,600 pF
1:	470 pF	8:	47,000 pF
4:	820 pF		

Other Capacitance values available. Consult Factory.

Ordering Information - Filtered Press Fit

FCC17 - B25 - S - R - 4 - 8 - 0 - G

Series Designation

Size and Configuration *

Connector Type
S: Socket P: Pin Consult Factory.

Termination Type
R: Press Fit

Mounting
2: .120 (3.05) Diameter Through Hole
3: 4-40 Self Locking Threaded Insert
4: 4-40 Threaded Inserts
5: 4-40 Threaded Standoff
6: M3 Threaded Inserts
E: Code 4 with 4-40 Hex Jack Socket

Special
G: 50 Micro Inches Gold

Modifier
0: Standard Product
x: Special or Custom Versions

Capacitance Value

D:	50 pF	5:	1,000 pF
0:	180 pF	E:	2,200 pF
F:	330 pF	9:	5,600 pF
1:	470 pF	8:	47,000 pF
4:	820 pF		

Other Capacitance values available. Consult Factory.

Ordering Information - Stacked D-Sub

FCC17 - 2 - BP - BS - 4 - 5 - 5 - X

Series Designation

Vertical Mounting Dimension Between Connectors
1 = .625 (15.88)
2 = .750 (19.05)

Upper Connector Configuration (Size and Style)

EP:	9 pin	BP:	25 pin
ES:	9 socket	BS:	25 socket
AP:	15 pin	CP:	37 pin
AS:	15 socket	CS:	37 socket

Lower Connector Configuration
(Size and Style) same as Upper Connector Configuration

Mounting
2: .120 (3.05) Diameter Through Hole on Flanges
4: 4-40 Threaded Inserts on Flanges
E: 4-40 Hex Jack Sockets (supplied loose)

Modifier
0: Standard Product
x: Special or Custom Versions

Lower Connector Filter Capacitance
same as Upper Connector Filter Capacitance Designation

Upper Connector Filter Capacitance

D:	50 pF	5:	1,000 pF
0:	180 pF	E:	2,200 pF
F:	330 pF	7:	1,200 pf
1:	470 pF	9:	5,600 pF
4:	820 pF	8:	47,000 pF

* For Additional Mounting Options and Filter Capacitance - Consult Factory

Ordering Information - D-Sub

FCC17 - B25 - S - C - 4 - 4 - 0 - G

Series Designation

Size
E09, A15, B25, C37

Connector type
A - Adapter P - Pin S - Socket

Termination Type
A - Right Angle PC Tail, .318 (8.08) Footprint
B - Right Angle PC Tail, .405 (10.29) Footprint
C - Right Angle PC Tail, .590 (14.99) Footprint
D - Pin/Socket Adapter
E - Vertical Mount PC Tail
M - Solder Cup
N - Vertical Mount PC Tail - Long Body

Mounting options*
A: 4-40 Threaded PC Tail Standoffs with Boardlock, Vertical Mount Only
E: 4-40 Hex Jack Sockets (supplied loose)
F: 4-40 Round Fixed Jack Sockets
2: .120 (3.05) diameter Through hole
3: Self-Locking 4-40 Threaded Inserts
4: 4-40 Threaded Inserts (Standard)
5: 4-40 Threaded Stand-Offs, Vertical Mount
6: M3 Threaded inserts

* For Additional Mounting Options and Filter Capacitance - Consult Factory

Specials
No Digit: Standard 15µ" (0.38µm) gold
G: 50µ" (1.27µm) gold
K: 30µ" (0.76µm) gold
L: Standard Connector with added ferrite block

Modifier
0 = Standard Product (Boardlocks on Right Angle D-Subs)
B = Metal Mounting Brackets, for Right Angle D-Subs
D = .315 (8.00) to Boardlock for .590 (14.99) footprint
E = Plastic Bracket - No Boardlock
F = No Boardlock, No plastic or metal Bracket - Alignment Strip Only
X = Specials or Custom Versions

Filter Capacitance (pF)*

D:	50 pF	5:	1,000 pF
B:	100 pF	7:	1,200 pF
0:	180 pF	E:	2,200 pF
F:	330 pF	9:	5,600 pF
1:	470 pF	8:	47,000 pF
4:	820 pF		

Ordering Information - Combo D-sub

FCC17 - A - 3W3 - P - M - 4 - 5 - 0 - G

Series Designation

Shell Size
A, B, C, D, E

Arrangement

Connector type
A = Adapter, P = Pin, S = Socket

Termination type
D = Pin/Socket Adapter
E = Power PC Tail – 40A - .126 (3.20) Dia., .175 (4.44) Lg.
K = Power Solder Cup – 10A – Wire Size 16
L = Power Solder Cup – 20A – Wire Size 12
M = Power Solder Cup – 40A – Wire Size 8
R = Power Press Fit – 20A - .145 (3.68) Lg. - .126 (3.20) Dia. Hole

Mounting Options
2 = .120 (3.05) dia. mounting holes
3 = 4-40 Threads Self locking
4 = 4-40 Threads
5 = 4-40 Standoffs - PC tail only
6 = M3 Threads
E = 4-40 Hex Jack Sockets (supplied loose)

* For Additional Mounting Options and Filter Capacitance - Consult Factory

Plating Option
Blank = Standard 30µ" (0.76µm) gold
G = 50µ" (1.27µm) gold

Modifier
0 = Standard
X = Specials or Custom versions (Consult Factory)

Filter Capacitance (pF)

D:	50 pF	5:	1000 pF
B:	100 pF	7:	1200 pF
o:	180 pF	E:	2200 pF
f:	330 pF	9:	5600 pF
I:	470 pF	8:	47000 pF
4:	820 pF		

INCHES (MM)

D'Sub Metallic Hoods

DTZK & DVZK series

MAIN CHARACTERISTICS

- **Material and plating:**
  Zinc die-cast, nickel plated
- **Cable strainrelief:**
  Steel fiber reinforced Polycarbonate UL94V-O
- **Temperature range:**
  -40˚C to 120˚C
- **Cable diameter:**
  3 to 13mm
- **Attenuation factor:**
  > 40 dB between 30 MHz and 1 GHz
- **Approvals:**
  VDE 0871 - FCC 20780 - 89 / 336 / EU

DESCRIPTION

Amphenol metallic hood series for D'Sub connectors offers protection from magnetic and radio interference to cable assemblies.

Easily assembled these hoods are suitable for all industrial and telecom applications.

Shield Your cable assemblies!

APPLICATIONS

- Industrial
- Military
- Telecom
- Any application requiring EMI/RFI protection

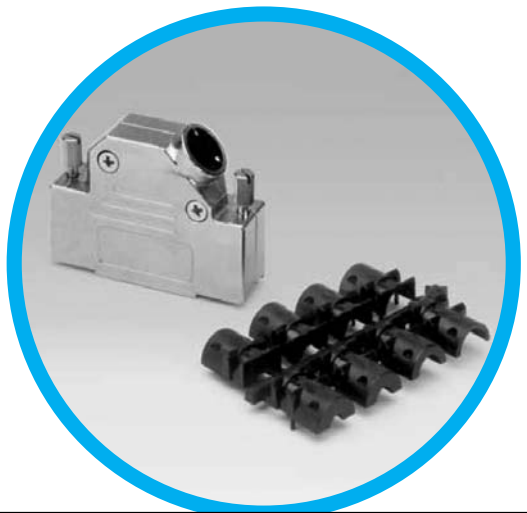

Amphenol RoHS Compliant EU 2002/95/EC

OVERALL DIMENSIONS

DTZK Series

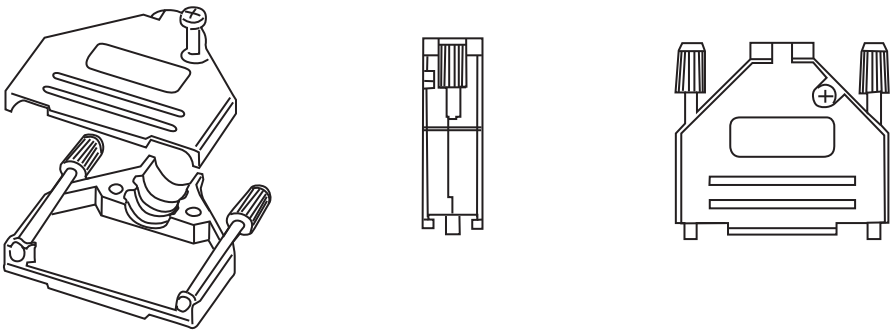

Part number	A	B
L17DTZK9Kxx	21 (.827”)	38.3 (1.508”)
L17DTZK15Kxx	39.5 (1.555”)	40.5 (1.594”)
L17DTZK25Kxx	54.4 (2.144”)	47.3 (1.862”)
L17DTZK37Kxx	70.9 (2.791”)	52.2 (2.055”)

DVZK Series

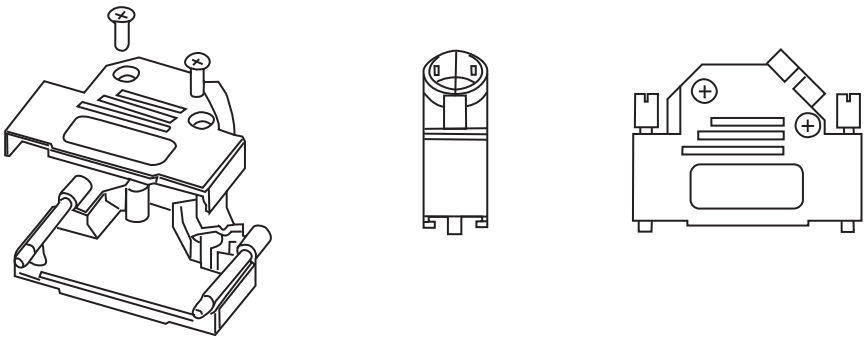

Part number	A	B
L17DVZK9Kxx	31 (1.220”)	36,2 (1.425”)
L17DVZK15Kxx	39,5 (1.555”)	40,2 (1.583”)
L17DVZK25Kxx	53,2 (2.094”)	40,2 (1.583”)
L17DVZK37Kxx	69,7 (2.744”)	40,2 (1.583”)

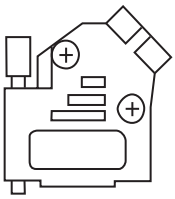

Assembly Instructions DTZK Series

Type	A
L17DTZK9Kxx	30
L17DTZK15Kxx	(1.181”)
L17DTZK25Kxx	40
L17DTZK37Kxx	(1.575”)

1.

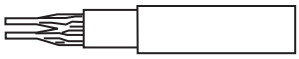

2.

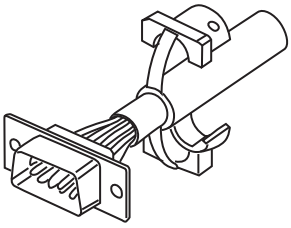

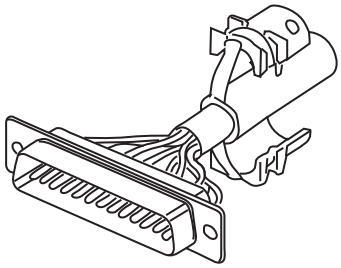

3.

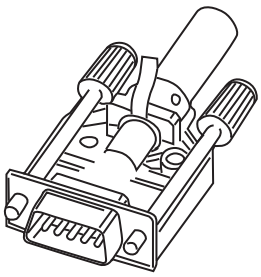

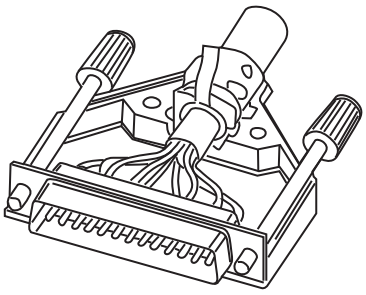

4.

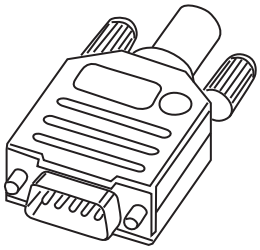

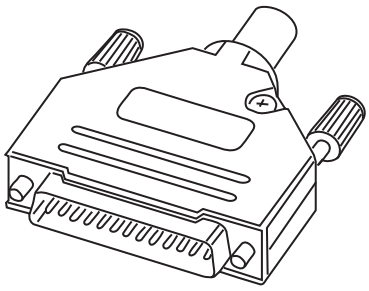

TECHNICAL DATA

Assemby Instrutions DVZK Series

1.

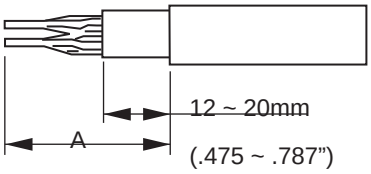

2.

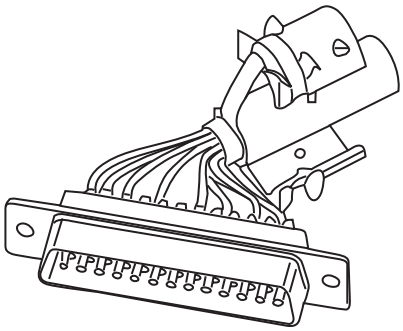

3.

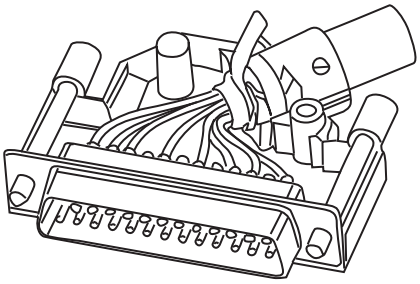

4.

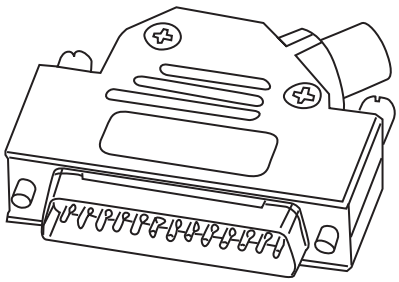

Type	A
L17DVZK9Kxx	30
L17DVZK15Kxx	(1.181")
L17DVZK25Kxx	45
L17DVZK37Kxx	(1.772")

Do not hesitate to contact us for further information

Amphenol

Amphenol IT & Communication Products
Block A3/A4, The 4th Industrial District of
Industrial Headquarters, Dong Keng Road
Gong Ming Town, Shen Zhen China
Fax:+86(0)755 2754 9955
Technical Support

he information given in this document are as a guideline only. We reserve the right to modify our products in any way we deem necessary. Any duplication is prohibited, unless approved in writing.

Accessories

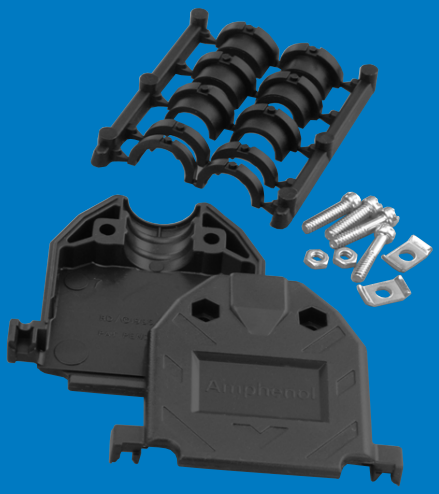

Amphenol's black plastic backshell accommodates most standard and high-density D-Subminiature connectors and is appropriate for most cable assemblies.
This version is economical and highly durable. The split-grommet insert provides cable strain relief while making it easy to assemble.

Plastic Backshell

Specifications:

Housing Material: Styrene (UL 94 VO)
Grommet Material: Polypropylene
Mounting Hardware: Steel, clear zinc finish *RoHS Compliant

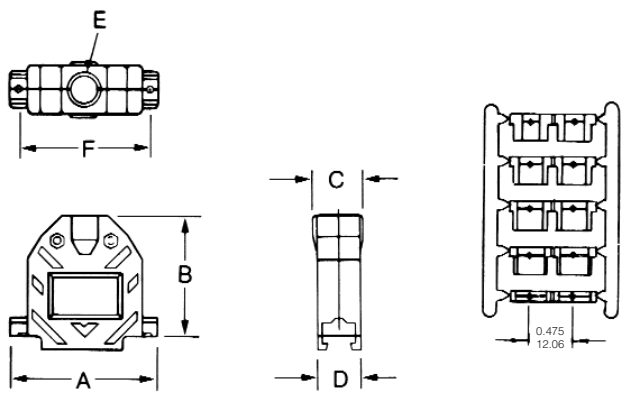

Dimensions and Ordering Information

Shell Size	Standard # of Contacts	Hi-Density # of Contacts	Part #	Dimensions A	B	C	D	E	F	Cable Diameter Range Minimum	Maximum
E	9	15	17E-1724-1	1.217 (30.91)	1.547 (39.29)	0.640 (16.26)	0.640 (16.26)	0.400 (10.16)	0.984 (24.99)	0.210 (5.33)	0.350 (8.89)
A	15	26	17E-1725-1	1.545 (39.24)	1.505 (38.23)	0.640 (16.26)	0.640 (16.26)	0.400 (10.16)	1.312 (33.32)	0.210 (5.33)	0.350 (8.89)
B	25	44	17E-1726-1	2.090 (53.08)	1.655 (42.04)	0.710 (18.03)	0.640 (16.26)	0.522 (13.26)	1.857 (47.17)	0.230 (5.84)	0.450 (11.43)
C	37	62	17E-1727-1	2.734 (69.44)	1.830 (46.48)	0.906 (23.01)	0.640 (16.26)	0.726 (18.44)	2.500 (63.50)	0.350 (8.89)	0.640 (16.26)
D	50	78	17E-1728-1	2.645 (67.18)	1.855 (47.12)	0.940 (23.88)	0.770 (19.56)	0.726 (18.44)	2.406 (61.11)	0.350 (8.89)	0.640 (16.26)

Plated Plastic Backshell

Specifications:

Housing Material:	ABS Polymer
Plating:	Nickel over copper
Grommet Material:	PVC (UL 94 VO)
Mounting Hardware:	Steel, clear zinc finish *RoHS Compliant

Assembly Instructions

1. *Select the tightest insert that will fit over the cable and thread the cable through it, placing the end with the smaller O.D. (the end without the washer) towards the connector.*
2. *Cut the jacket, fold the shielding back over the outside of the insert and cut it just short of the washer.*
3. *Install jackscrews and connector.*
4. *Place the washer in the outermost depression in the exit area of the hood and screw the cover closed.*

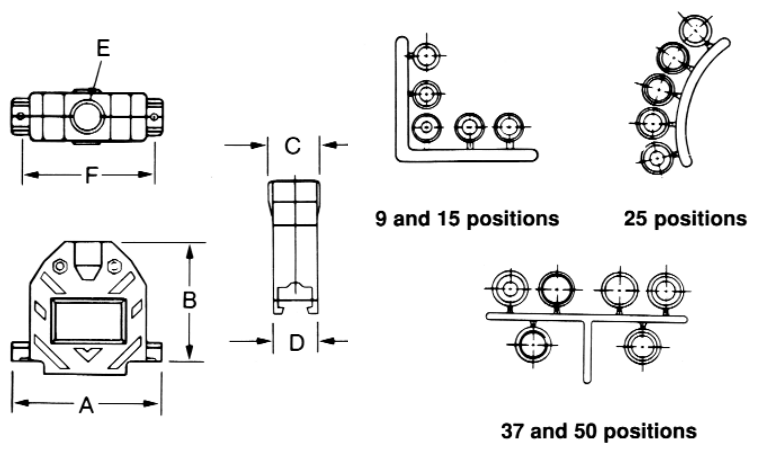

Accessories

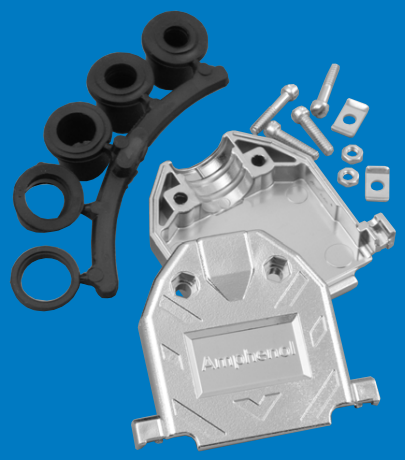

Amphenol's plated plastic backshell accommodates most standard and high-density D-Subminiature connectors and is appropriate for cable assemblies requiring compliance to FCC 20780. This version is highly durable and provides EMI/RFI protection. The rubber grommet compression insert forces the cable's shielding against the inside of the cable exit area, assuring shielding.

Dimensions and Ordering Information

Shell Size	Standard # of Contacts	Hi-Density # of Contacts	Part #	Dimensions						Cable Diameter Range	
				A	B	C	D	E	F	Minimum	Maximum
E	9	15	17E-1724-2	1.217 (30.91)	1.547 (39.29)	0.640 (16.26)	0.640 (16.26)	0.400 (10.16)	0.984 (24.99)	0.210 (5.33)	0.320 (8.13)
A	15	26	17E-1725-2	1.545 (39.24)	1.505 (38.23)	0.640 (16.26)	0.640 (16.26)	0.400 (10.16)	1.312 (33.32)	0.210 (5.33)	0.320 (8.13)
B	25	44	17E-1726-2	2.000 (50.8)	1.655 (42.04)	0.710 (18.03)	0.640 (16.26)	0.522 (13.26)	1.857 (47.17)	0.230 (5.84)	0.450 (11.43)
C	37	62	17E-1727-2	2.730 (69.34)	1.830 (46.48)	0.906 (23.01)	0.640 (16.26)	0.726 (18.44)	2.500 (63.50)	0.350 (8.89)	0.650 (16.51)
D	50	78	17E-1728-2	2.645 (67.18)	1.855 (47.12)	0.940 (23.88)	0.440 (11.18)	0.726 (18.44)	2.406 (61.11)	0.350 (8.89)	0.650 (16.51)

Inches (mm)

Telephone: (416) 754-5656 Fax: (416) 754-8668 E-Mail: sales@amphenolcanada.com

Accessories

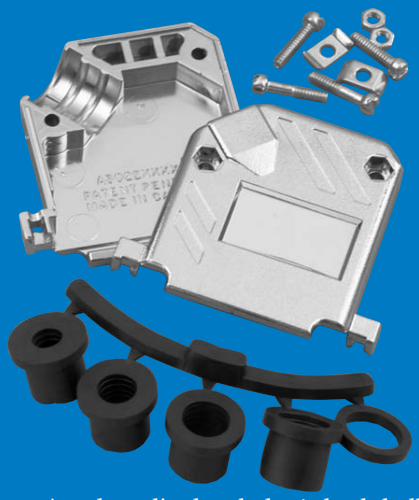

Amphenol's plated plastic backshell accommodates most standard and high-density D-Subminiature connectors and is appropriate for cable assemblies requiring compliance to FCC 20780. This version is highly durable and provides EMI/RFI protection. The rubber grommet compression insert forces the cable's shielding against the inside of the cable exit area, assuring shielding. The 45° cable exit helps save space behind equipment.

45° Plated Plastic Backshell

Specifications:

Housing Material:	ABS Polymer
Plating:	Nickel over copper
Grommet Material:	PVC (UL 94 VO)
Mounting Hardware:	Steel, clear zinc finish *RoHS Compliant

Assembly Instructions

1. *Select the tightest insert that will fit over the cable and thread the cable through it, placing the end with the smaller O.D. (the end without the washer) towards the connector.*
2. *Cut the jacket, fold the shielding back over the outside of the insert and cut it just short of the washer.*
3. *Install jackscrews and connector.*
4. *Place the washer in the outermost depression in the exit area of the hood and screw the cover closed.*

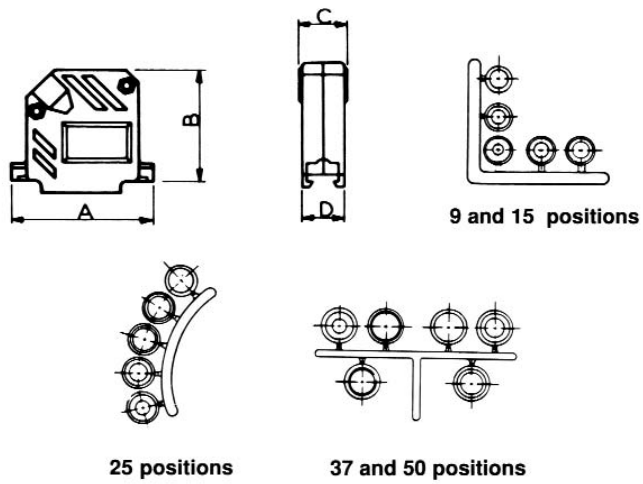

Dimensions and Ordering Information

Shell Size	Standard # of Contacts	Hi-Density # of Contacts	Part #	Dimensions A	B	C	D	E	F	Cable Diameter Range Minimum	Maximum
E	9	15	17E-1824-2	1.217 (30.91)	1.430 (36.32)	0.640 (16.26)	0.640 (16.26)	0.400 (10.16)	0.984 (24.99)	0.210 (5.33)	0.320 (8.13)
A	15	26	17E-1825-2	1.545 (39.24)	1.568 (39.83)	0.640 (16.26)	0.640 (16.26)	0.400 (10.16)	1.312 (33.32)	0.210 (5.33)	0.320 (8.13)
B	25	44	17E-1826-2	2.090 (53.09)	1.735 (44.07)	0.710 (18.03)	0.640 (16.26)	0.522 (13.26)	1.857 (47.17)	0.230 (5.84)	0.450 (11.43)
C	37	62	17E-1827-2	2.734 (69.44)	1.976 (50.19)	0.906 (23.01)	0.640 (16.26)	0.726 (18.44)	2.500 (63.5)	0.350 (8.89)	0.650 (16.51)

Two-Piece Die Cast Shielded Backshells

Specifications:

Housing Material:	Die cast zinc
Grommet Material:	PVC (UL 94 VO)
Mounting Hardware:	Steel, clear zinc finish *RoHS Compliant

Assembly Instructions

1. *Select the tightest insert that will fit over the cable and thread the cable through it, placing the end with the smaller O.D. (the end without the washer) towards the connector.*
2. *Cut the jacket, fold the shielding back over the outside of the insert and cut it just short of the washer.*
3. *Install jackscrews and connector.*
4. *Place the washer in the outermost depression in the exit area of the hood and screw the cover closed.*

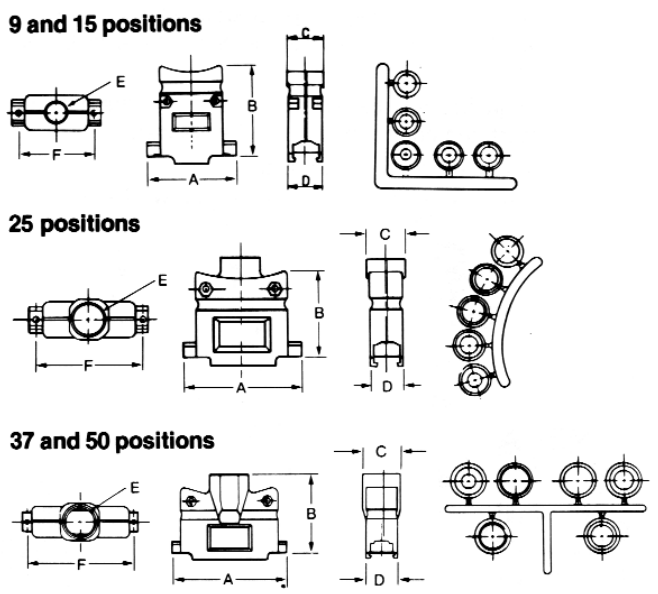

Accessories

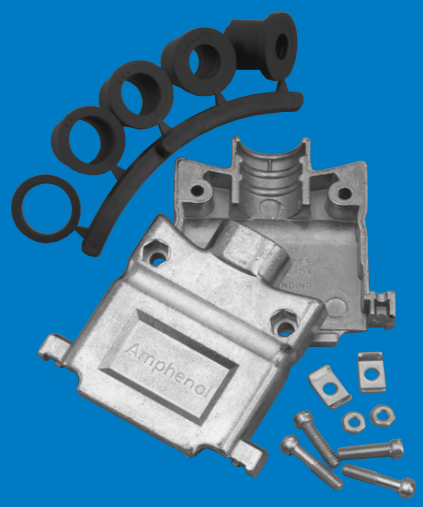

Amphenol's metal backshell accommodates most standard and high-density D-Subminiature connectors and is appropriate for cable assemblies requiring compliance to FCC 20780. This version is highly durable and provides EMI/RFI protection. The rubber grommet compression insert forces the cable's shielding against the inside of the cable exit area, assuring shielding.

Dimensions and Ordering Information

Shell Size	Standard # of Contacts	Hi-Density # of Contacts	Part #	Dimensions A	B	C	D	E	F	Cable Diameter Range Minimum	Maximum
E	9	15	17E-1657-09	1.217 (30.91)	1.430 (36.32)	0.640 (16.26)	0.640 (16.26)	0.400 (10.16)	0.984 (24.99)	0.210 (5.33)	0.320 (8.13)
A	15	26	17E-1657-15	1.545 (39.24)	1.568 (39.83)	0.640 (16.26)	0.640 (16.26)	0.400 (10.16)	1.312 (33.32)	0.210 (5.33)	0.320 (8.13)
B	25	44	17E-1657-25	2.090 (53.09)	1.735 (44.07)	0.710 (18.03)	0.640. (16.26)	0.522 (13.26)	1.857 (47.17)	0.230 (5.84)	0.450 (11.43)
C	37	62	17E-1657-37	2.734 (69.44)	1.976 (50.19)	0.906 (23.01)	0.640 (16.26)	0.726 (18.44)	2.500 (63.5)	0.350 (8.89)	0.640 (16.26)

Inches (mm)

Telephone: (416) 754-5656 Fax: (416) 754-8668 E-Mail: sales@amphenolcanada.com