Excellent Integrated System Limited

Stocking Distributor

Click to view price, real time Inventory, Delivery & Lifecycle Information:

Bivar, Inc.
H380CGAYD

For any questions, you can email us directly:
sales@integrated-circuit.com

Distributor of Bivar, Inc.: Excellent Integrated System Limited
Datasheet of H380CGAYD - LED ASSY RA 1.8MM 3X1 G/A/Y DIFF
Contact us: sales@integrated-circuit.com Website: www.integrated-circuit.com

ITEM	Q'TY	PART NUMBER	PART DESCRIPTION
1	1	H-381C	Tri-Level Sub-Miniature (1.8mm) LED 90° Holder
2	3	1.8XXX	1.8 Sub-Miniature Radial LED, See Page 2
3	1	BCH-1020	Backplate

REV.	DESCRIPTION	DATE	APPROVED
C	Added Backplate Feature	10/15/07	M. C.
D	Updated Item Number on Model	01/04/08	M. C.
E	Updated Part Number Designation	08/28/08	M. C.
F	Added 1.8BWD Specs	09/12/08	M. C.
G	Engineering Update w/o Changes	06/24/16	J. C.

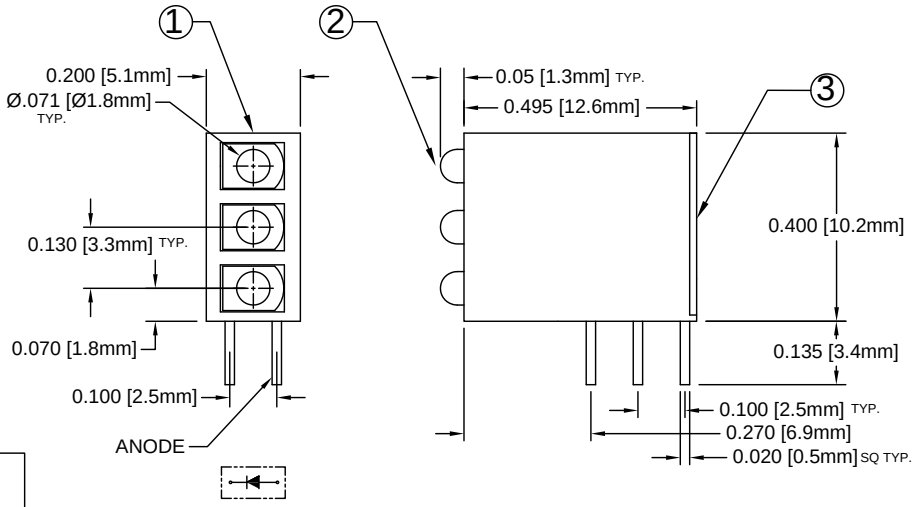

DIN 41494 COMPATIBLE
REVERSE POLARITY

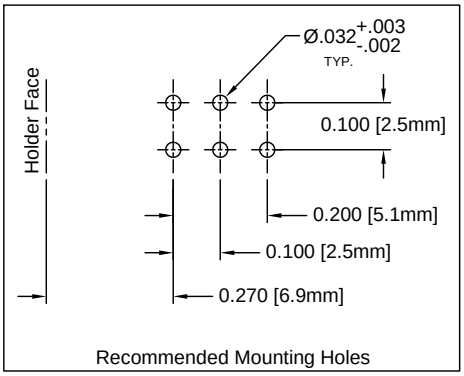

Recommended Mounting Holes

NOTE: P/N DESIGNATION

H380CXXXDX

- H380 Holder Series
- Color of top LED - Use "X" if blank
- Color of middle LED - Use "X" if blank
- Color of bottom LED - Use "X" if blank
- " " Standard LED
- "L" Low Current LED
- Diffused Lens

-If LEDs are the same, use e.g. H380CGD
All Green LEDs

ABSOLUTE MAXIMUM RATINGS (Ta=25° C)

REVERSE VOLTAGE	5V
REVERSE CURRENT	100uA
OPERATING TEMPERATURE RANGE	−40° C – 80° C
STORAGE TEMPERATURE	−40° C – 100° C
LEAD SOLDERING TEMPERATURE(1/16" FROM BODY)	260° C FOR 5 SECONDS

STANDARD TOLERANCE
(UNLESS OTHERWISE SPECIFIED)

DECIMALS		ANGULAR
.X	± .1	X° ± 1°
.XX	± .02	
.XXX	± .010	

BIVAR®
4 THOMAS, IRVINE, CA. 92618
TEL: (949) 951-8808 FAX: (949) 951-3974

TITLE: SUB-MINIATURE (1.8MM) 90° TRI-LEVEL LED ASSEMBLY

DESIGNED:	DATE:	PART NO:	REVISION:
T. Yin	03/08/04	H380CXX	G
CHECKED: D. Green	DATE: 03/08/04	CAGE CODE : 32559	SHEET # 1 OF 2

CAD GENERATED DOCUMENT, DO NOT MEASURE DRAWING.

REV.	DESCRIPTION	DATE	APPROVED
	SEE SHEET #1		

LED Assy. No.	Peak Wave Length λp(nm)	Emitted Color	Lens Appearance	Electro-Optical Data @ 20 mA				Viewing Angle 2 Θ ½ (Deg)	LED P/N
				If (mA)	Vf (V)		Iv (mcd)		
				TYP	TYP	MAX	TYP		
H380CBWD	430	BLUE	DIFFUSED	20	4.0	4.5	10	50	1.8BWD
H380CGD	568	GREEN	DIFFUSED	20	2.1	2.8	20	50	1.8GD
H380CYD	590	YELLOW	DIFFUSED	20	2.0	2.8	10	50	1.8YD
H380CHD	625	HE RED	DIFFUSED	20	2.0	2.8	20	50	1.8HD
H380CAD	605	AMBER	DIFFUSED	20	2.0	2.8	20	50	1.8AD
LOW CURRENT				Data @ 2 mA					
H380CGDL	568	GREEN	DIFFUSED	2	2.1	2.6	2.0	50	1.8GDL
H380CYDL	590	YELLOW	DIFFUSED	2	2.0	2.6	2.0	50	1.8YDL
H380CHDL	625	HE RED	DIFFUSED	2	2.0	2.6	2.0	50	1.8HDL

STANDARD TOLERANCE
(UNLESS OTHERWISE SPECIFIED)
±10% ALL VALUES ANGULAR

BIVAR®
4 THOMAS, IRVINE, CA. 92618
TEL: (949) 951-8808 FAX: (949) 951-3974

TITLE: SUB-MINIATURE (1.8MM) 90° TRI-LEVEL LED ASSEMBLY

DESIGNED:	DATE:	PART NO:	REVISION:
T. Yin	03/08/04	H380CXX	G
CHECKED: D. Green	DATE: 03/08/04	CAGE CODE : 32559	SHEET # 2 OF 2

CAD GENERATED DOCUMENT. DO NOT MEASURE DRAWING.