Excellent Integrated System Limited

Stocking Distributor

Click to view price, real time Inventory, Delivery & Lifecycle Information:

FCI
TL02058000J0G

For any questions, you can email us directly:
sales@integrated-circuit.com

Distributor of FCI: Excellent Integrated System Limited
Datasheet of TL02058000J0G - 500 TB WIR PRO 90D SOL
Contact us: sales@integrated-circuit.com Website: www.integrated-circuit.com

Copyright FCI.

FCIconnect.com

PRODUCT NUMBER	PITCH
TLxx05x000J0G	5.00 mm

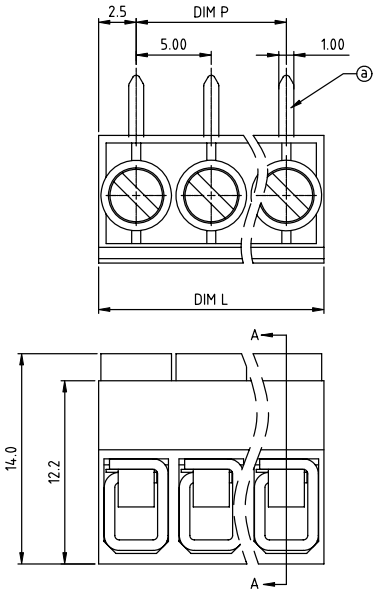

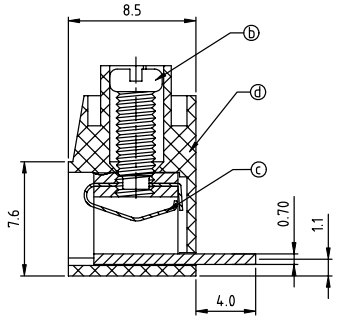

SECTION A-A

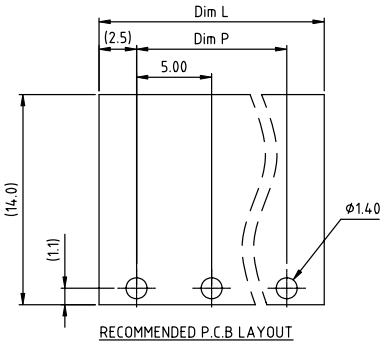

RECOMMENDED P.C.B LAYOUT
TOP VIEW

Material

- Item a Terminal body: Brass stamping,Tin plated
- Item b Terminal screw: Steel Zinc plating "-" slot type
- Item c Wire guard: PhBz,Tin plated
- Item d Terminal (housing): Thermoplastic (UL94V-0)

Electrical cULus

- Voltage rating: 250VAC
- Current rating: 15A
- Wire range:
- Solid wire(AWG): 12-22
- Stranded wire(AWG): 12-22
- Torque(Lb-In): 3.5
- Screw: M2.5
- Wire strip length: 6-7mm
- Withstanding Voltage: 1.6KV
- Operating temperature: -40°C to +115°C
- Soldering temperature: 260°C±5°C/5 Sec
- Safety Approval: cULus

N = Number of poles
Dim L= Nx5.0
Dim P= (N-1) X5.0

Poles	Dim L	Dim P
2-6p	±0.15	±0.10
7-12p	±0.20	±0.20
13-18p	±0.30	±0.25
19-24p	±0.40	±0.30

PART NO.: TL xx 05 x 0 00J0 G

Solid Block
No. of poles
02 2 poles
03 3 poles
... ...
24 24 poles

Body Color
0 Black (RAL9005)
2 Red (RAL3001/D)
3 Orange(RAL2011/P)
4 Yellow(RAL1018/A)
5 Green(RAL6018/T)
6 Blue (RAL5015/A)
8 Grey(RAL7035/D)
9 White(RAL1102)
C Green(RAL6018/U)

RoHS compliant
(lead<4%)
In copper Alloy

mat'l. code				surface ASME Y14.5	tolerance ASME Y14.5	projection	product family TERMINAL BLOCK
ltr	ecn no	dr	date	tolerances unless otherwise specified			title
				angles	linear X.±0.5 / X.X±0.3 / X.XX±0.1	MM	TERMINAL BLOCK
				X°±1°		scale	WIRE PROTECTOR,90D WIRE INLET
				dr	EVIN ZHONG 040114	FCI	dwg no TLxx05x000J0G — sheet 1 of 1 — size A4
				engr	EVIN ZHONG 040114		
				chr	HANKE FENG 040114		
				appd	SHI JUN 040114		type CUSTOMER Drawing
sheet index	revision sheet	A 1					

form: A4mmXLc