Excellent Integrated System Limited

Stocking Distributor

Click to view price, real time Inventory, Delivery & Lifecycle Information:

Isocom Components 2004 LTD
PS2505-4X

For any questions, you can email us directly:
sales@integrated-circuit.com

PS2505-1X, PS2505-2X, PS2505-4X
PS2505-1, PS2505-2, PS2505-4

HIGH DENSITY A.C. INPUT PHOTOTRANSISTOR OPTICALLY COUPLED ISOLATORS

APPROVALS

- UL recognised, File No. E91231
  Package code " EE "

'X' SPECIFICATION APPROVALS

- VDE 0884 in 3 available lead form : -
  - STD
  - G form
  - SMD approved to CECC 00802
- Certified to EN60950 by
  Nemko - Certificate No. P01102465

DESCRIPTION

The PS2505-1, PS2505-2, PS2505-4 series of optically coupled isolators consist of two infrared light emitting diodes connected in inverse parallel and NPN silicon photo transistors in space efficient dual in line plastic packages.

FEATURES

- Options :-
  10mm lead spread - add G after part no.
  Surface mount - add SM after part no.
  Tape&reel - add SMT&R after part no.
- High Isolation Voltage ($5.3kV_{RMS}$, $7.5kV_{PK}$)
- AC or polarity insensitive input
- All electrical parameters 100% tested
- Custom electrical selections available

APPLICATIONS

- Computer terminals
- Industrial systems controllers
- Telephone sets, Telephone exchangers
- Signal transmission between systems of different potentials and impedances

Dimensions in mm

PS2505-1X
PS2505-1

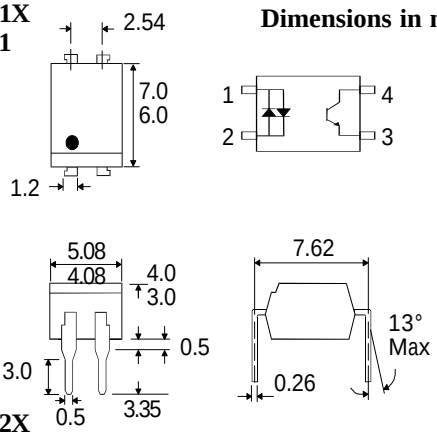

PS2505-2X
PS2505-2

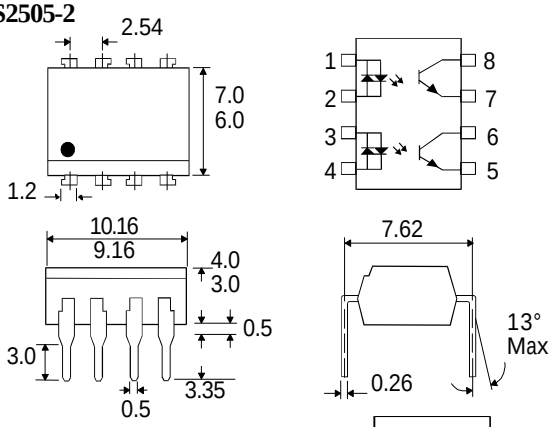

PS2505-4X
PS2505-4

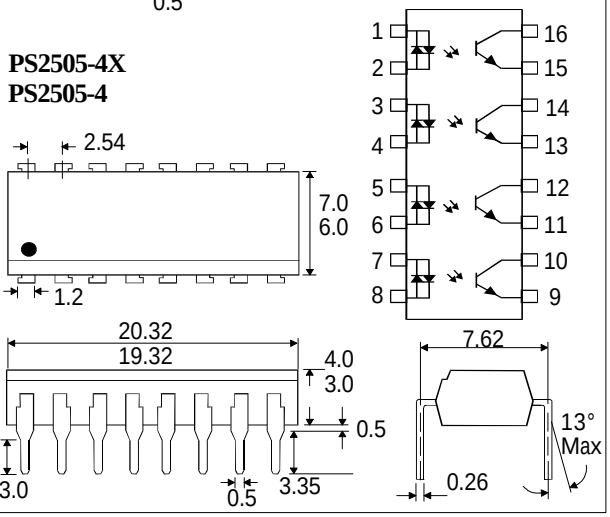

OPTION SM
SURFACE MOUNT

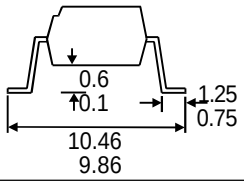

OPTION G

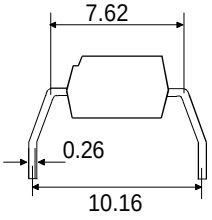

ISOCOM COMPONENTS LTD
Unit 25B, Park View Road West,
Park View Industrial Estate, Brenda Road
Hartlepool, Cleveland, TS25 1YD
Tel: (01429) 863609 Fax :(01429) 863581

ABSOLUTE MAXIMUM RATINGS
(25°C unless otherwise specified)

Storage Temperature	-55°C to +125°C
Operating Temperature	-30°C to +100°C
Lead Soldering Temperature (1/16 inch (1.6mm) from case for 10 secs)	260°C

INPUT DIODE

Forward Current	±50mA
Power Dissipation	70mW

OUTPUT TRANSISTOR

Collector-emitter Voltage BV_{CEO}	80V
Emitter-collector Voltage BV_{ECO}	6V
Collector Current	50mA
Power Dissipation	150mW

POWER DISSIPATION

Total Power Dissipation (derate linearly 2.67mW/°C above 25°C)	200mW

ELECTRICAL CHARACTERISTICS (T_A = 25°C Unless otherwise noted)

PARAMETER		MIN	TYP	MAX	UNITS	TEST CONDITION
Input	Forward Voltage (V_F)		1.2	1.4	V	I_F = ± 10mA
Output	Collector-emitter Breakdown (BV_{CEO}) (Note 2)	80			V	I_C = 1mA
	Emitter-collector Breakdown (BV_{ECO})	6			V	I_E = 100µA
	Collector-emitter Dark Current (I_{CEO})			100	nA	V_{CE} = 20V
Coupled	Current Transfer Ratio (CTR) (Note 2) PS2505-1, PS2505-2, PS2505-4	80		600	%	± 5mAI_F, 5V V_{CE}
	Collector-emitter Saturation Voltage $V_{CE\ (SAT)}$			0.3	V	± 10mAI_F, 2mAI_C
	Input to Output Isolation Voltage V_{ISO}	5300 7500			V_{RMS} V_{PK}	See note 1 See note 1
	Input-output Isolation Resistance R_{ISO}	$5x10^{10}$			Ω	V_{IO} = 500V (note 1)
	Output Rise Time tr Output Fall Time tf		4 3		µs µs	V_{CE} = 2V, I_C = 2mA, R_L = 100Ω

Note 1 Measured with input leads shorted together and output leads shorted together.
Note 2 Special Selections are available on request. Please consult the factory

Collector Power Dissipation vs. Ambient Temperature

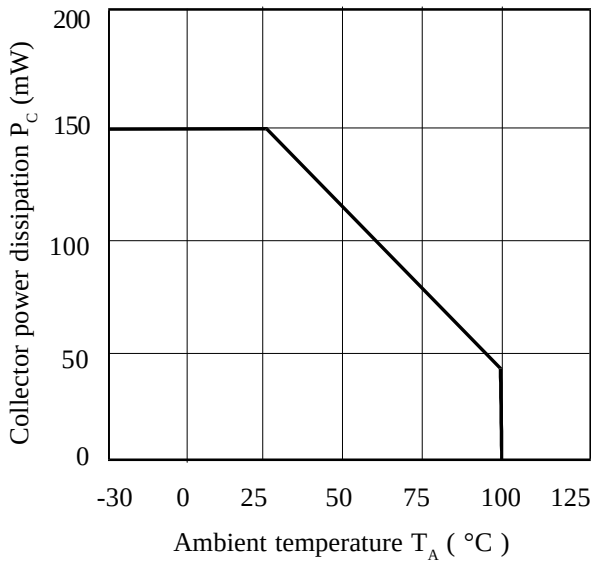

Collector-emitter Saturation Voltage vs. Forward Current

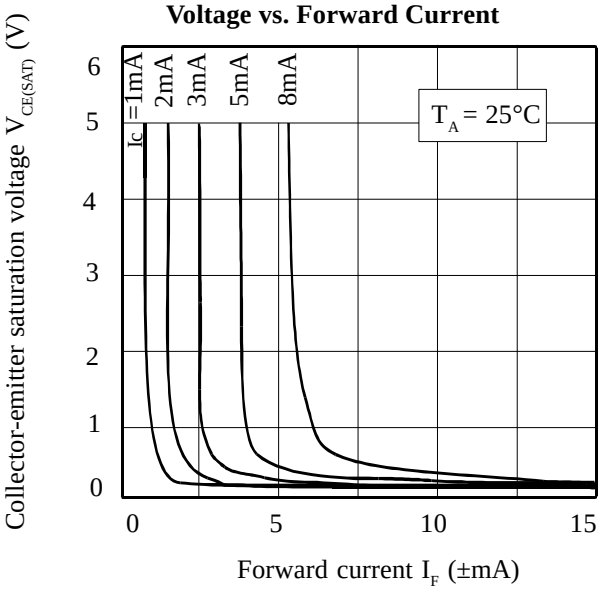

Forward Current vs. Ambient Temperature

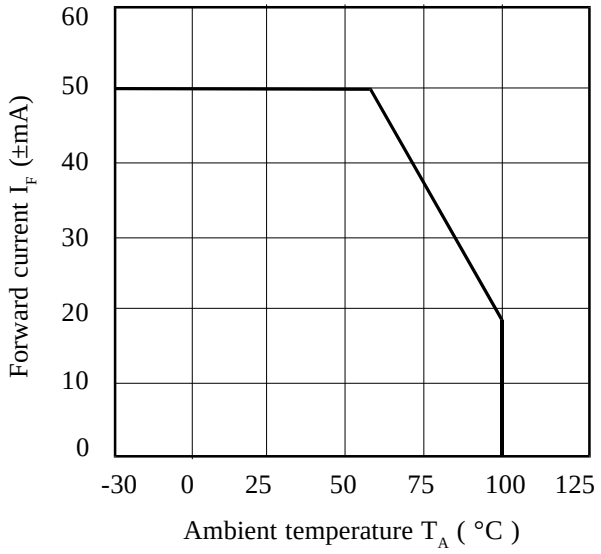

Collector Current vs. Collector-emitter Voltage

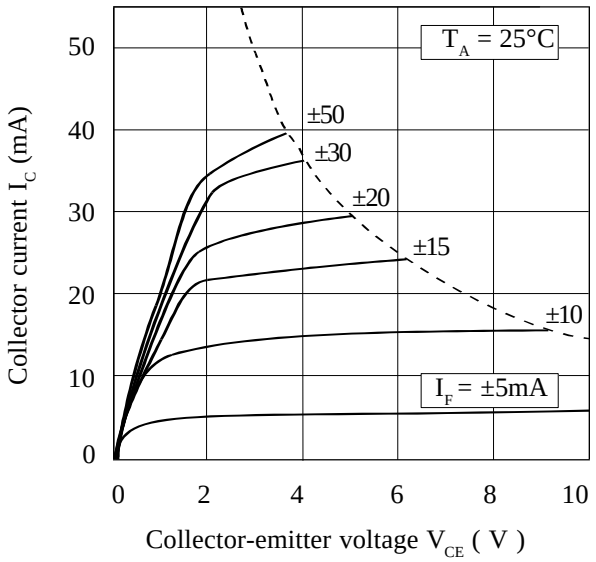

Collector-emitter Saturation Voltage vs. Ambient Temperature

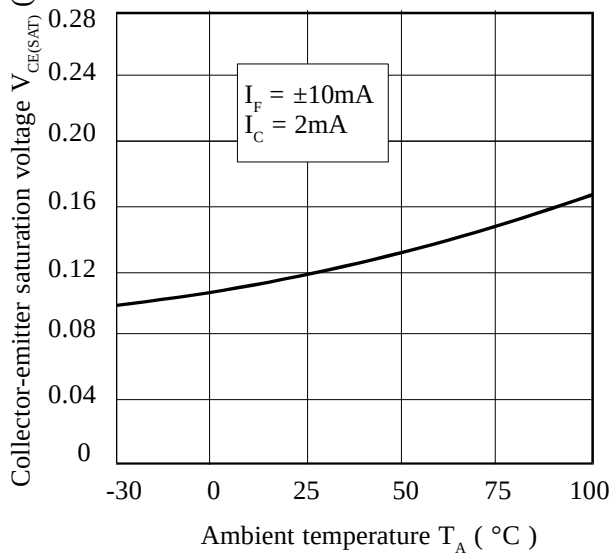
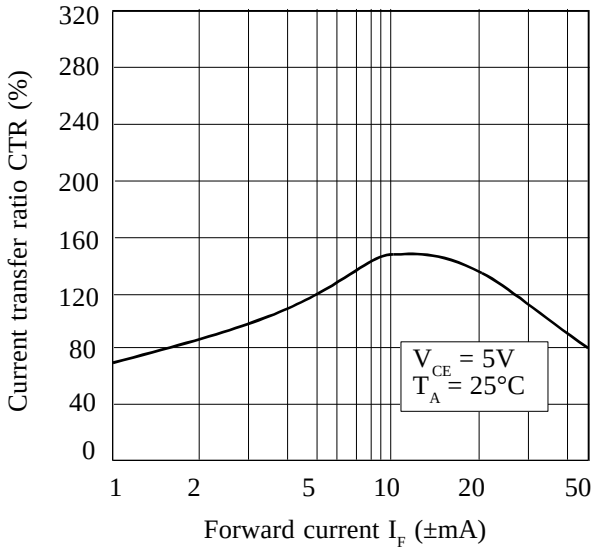
Current Transfer Ratio vs. Forward Current