Excellent Integrated System Limited

Stocking Distributor

Click to view price, real time Inventory, Delivery & Lifecycle Information:

Texas Instruments
TPS3701DDCT

For any questions, you can email us directly:
sales@integrated-circuit.com

Distributor of Texas Instruments: Excellent Integrated System Limited
Datasheet of TPS3701DDCT - IC COMPARATOR WINDOW 6SOT
Contact us: sales@integrated-circuit.com Website: www.integrated-circuit.com

TPS3701 36-V Window Comparator with Internal Reference for Over- and Undervoltage Detection

1 Features

- Wide Supply Voltage Range: 1.8 V to 36 V
- Adjustable Threshold: Down to 400 mV
- Open-Drain Outputs for Over- and Undervoltage Detection
- Low Quiescent Current: 7 µA (typ)
- High Threshold Accuracy:
  - 0.75% Over Temperature
  - 0.25% (typ)
- Internal Hysteresis: 5.5 mV (typ)
- Temperature Range: –40°C to 125°C
- Package:
  - SOT-6

2 Applications

- Industrial Control Systems
- Embedded Computing Modules
- DSPs, Microcontrollers, and Microprocessors
- Notebook and Desktop Computers
- Portable- and Battery-Powered Products
- FPGA and ASIC Systems

3 Description

The TPS3701 wide-supply voltage window comparator operates over a 1.8-V to 36-V range. The device has two precision comparators with an internal 400-mV reference and two open-drain outputs (OUTA and OUTB) rated to 25 V for over- and undervoltage detection. Use the TPS3701 as a window comparator or as two independent voltage monitors; set the monitored voltage with the use of external resistors.

OUTA is driven low when the voltage at the INA pin drops below the negative threshold, and goes high when the voltage returns above the positive threshold. OUTB is driven low when the voltage at the INB pin rises above the positive threshold, and goes high when the voltage drops below the negative threshold. Both comparators in the TPS3701 include built-in hysteresis for noise rejection, thereby ensuring stable output operation without false triggering.

The TPS3701 is available in a SOT-6 package and is specified over the junction temperature range of –40°C to 125°C.

Device Information(1)

PART NUMBER	PACKAGE	BODY SIZE (NOM)
TPS3701	SOT (6)	2.90 mm × 1.60 mm

(1) For all available packages, see the package option addendum at the end of the datasheet.

Typical Application

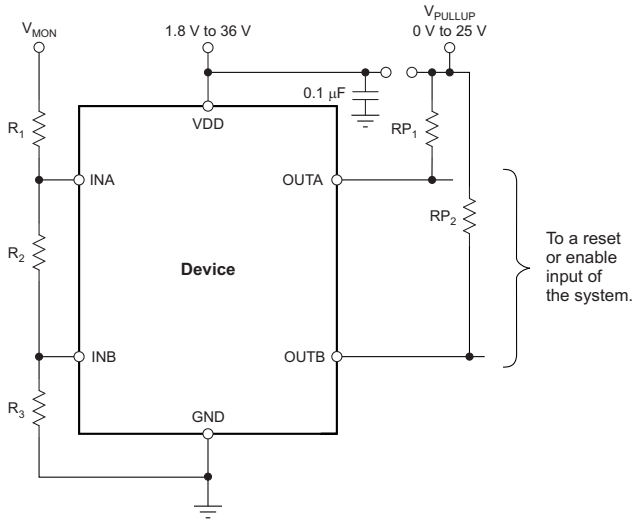

Typical Error vs Junction Temperature

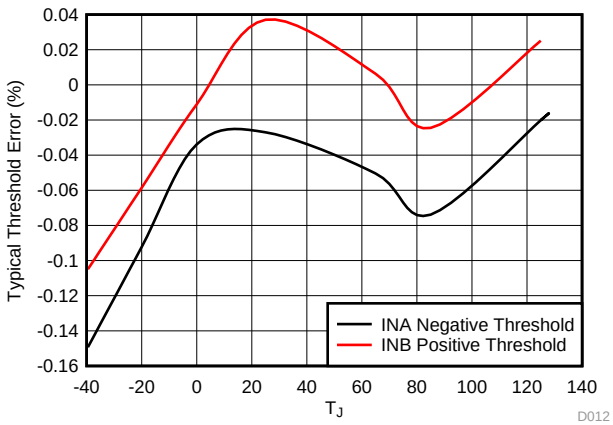

An IMPORTANT NOTICE at the end of this data sheet addresses availability, warranty, changes, use in safety-critical applications, intellectual property matters and other important disclaimers. PRODUCTION DATA.

Distributor of Texas Instruments: Excellent Integrated System Limited
Datasheet of TPS3701DDCT - IC COMPARATOR WINDOW 6SOT
Contact us: sales@integrated-circuit.com Website: www.integrated-circuit.com

Table of Contents

1 Features ... 1
2 Applications ... 1
3 Description ... 1
4 Revision History ... 2
5 Pin Configuration and Functions ... 3
6 Specifications ... 4
6.1 Absolute Maximum Ratings ... 4
6.2 Handling Ratings ... 4
6.3 Recommended Operating Conditions ... 4
6.4 Thermal Information ... 4
6.5 Electrical Characteristics ... 5
6.6 Timing Requirements ... 6
6.7 Typical Characteristics ... 7
7 Detailed Description ... 10
7.1 Overview ... 10
7.2 Functional Block Diagram ... 10
7.3 Feature Description ... 11
7.4 Device Functional Modes ... 11
8 Application and Implementation ... 12
8.1 Application Information ... 12
8.2 Typical Application ... 16
9 Power Supply Recommendations ... 18
10 Layout ... 19
10.1 Layout Guidelines ... 19
10.2 Layout Example ... 19
11 Device and Documentation Support ... 20
11.1 Documentation Support ... 20
11.2 Trademarks ... 20
11.3 Electrostatic Discharge Caution ... 20
11.4 Glossary ... 20
12 Mechanical, Packaging, and Orderable Information ... 20

4 Revision History

DATE	REVISION	NOTES
November 2014	*	Initial release

Copyright © 2014, Texas Instruments Incorporated

5 Pin Configuration and Functions

DDC Package
SOT-6
(Top View)

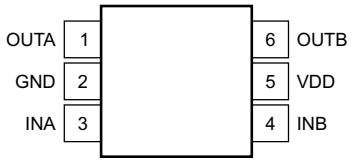

Pin Functions

PIN		I/O	DESCRIPTION
NAME	NO.		
GND	2	—	Ground
INA	3	I	Comparator A input. This pin is connected to the voltage to be monitored with the use of an external resistor divider. When the voltage at this terminal drops below the threshold voltage $V_{IT-(INA)}$, OUTA is driven low.
INB	4	I	Comparator B input. This pin is connected to the voltage to be monitored with the use of an external resistor divider. When the voltage at this terminal exceeds the threshold voltage $V_{IT+(INB)}$, OUTB is driven low.
OUTA	1	O	INA comparator open-drain output. OUTA is driven low when the voltage at this comparator is less than $V_{IT-(INA)}$. The output goes high when the sense voltage rises above $V_{IT+(INA)}$.
OUTB	6	O	INB comparator open-drain output. OUTB is driven low when the voltage at this comparator exceeds $V_{IT+(INB)}$. The output goes high when the sense voltage falls below $V_{IT-(INB)}$.
VDD	5	I	Supply voltage input. Connect a 1.8-V to 36-V supply to VDD to power the device. It is good analog design practice to place a 0.1-µF ceramic capacitor close to this pin.

6 Specifications

6.1 Absolute Maximum Ratings[1]

Over operating junction temperature range, unless otherwise noted.

		VALUE		UNIT
		MIN	MAX	
Voltage[2]	V_{DD}	–0.3	+40	V
	V_{OUTA}, V_{OUTB}	–0.3	+28	V
	V_{INA}, V_{INB}	–0.3	+7	V
Current	Output pin current		40	mA
Temperature	Operating junction, T_J	–40	+125	°C

(1) Stresses beyond those listed under *Absolute Maximum Ratings* may cause permanent damage to the device. These are stress ratings only, which do not imply functional operation of the device at these or any other conditions beyond those indicated under *Recommended Operating Conditions*. Exposure to absolute-maximum-rated conditions for extended periods may affect device reliability.
(2) All voltages are with respect to network ground terminal.

6.2 Handling Ratings

			MIN	MAX	UNIT
T_{stg}	Storage temperature range		–65	+150	°C
$V_{(ESD)}$	Electrostatic discharge	Human body model (HBM), per ANSI/ESDA/JEDEC JS-001, all pins[1]	–2000	+2000	V
		Charged device model (CDM), per JEDEC specification JESD22-C101, all pins[2]	–500	+500	

(1) JEDEC document JEP155 states that 500-V HBM allows safe manufacturing with a standard ESD control process.
(2) JEDEC document JEP157 states that 250-V CDM allows safe manufacturing with a standard ESD control process.

6.3 Recommended Operating Conditions

over operating junction temperature range (unless otherwise noted)

		MIN	NOM	MAX	UNIT
V_{DD}	Supply pin voltage	1.8		36	V
V_{INA}, V_{INB}	Input pin voltage	0		1.7	V
V_{OUTA}, V_{OUTB}	Output pin voltage	0		25	V
I_{OUTA}, I_{OUTB}	Output pin current	0		10	mA
T_J	Junction temperature	–40	+25	+125	°C

6.4 Thermal Information

THERMAL METRIC[1]		TPS3701 DDC (SOT) 6 PINS	UNITS
$R_{\theta JA}$	Junction-to-ambient thermal resistance	201.6	°C/W
$R_{\theta JC(top)}$	Junction-to-case (top) thermal resistance	47.8	
$R_{\theta JB}$	Junction-to-board thermal resistance	51.2	
ψ_{JT}	Junction-to-top characterization parameter	0.7	
ψ_{JB}	Junction-to-board characterization parameter	50.8	
$R_{\theta JC(bot)}$	Junction-to-case (bottom) thermal resistance	N/A	

(1) For more information about traditional and new thermal metrics, see the *IC Package Thermal Metrics* application report, SPRA953.

Copyright © 2014, Texas Instruments Incorporated

6.5 Electrical Characteristics

Over the operating temperature range of T_J = –40°C to +125°C, 1.8 V ≤ V_{DD} < 36 V, and pullup resistors $RP_{1,2}$ = 100 kΩ, unless otherwise noted. Typical values are at T_J = 25°C and V_{DD} = 12 V.

PARAMETER		TEST CONDITIONS	MIN	TYP	MAX	UNIT
V_{DD}	Supply voltage range		1.8		36	V
$V_{(POR)}$	Power-on reset voltage(1)	V_{OL} ≤ 0.2 V			0.8	V
$V_{IT-(INA)}$	INA pin negative input threshold voltage	V_{DD} = 1.8 V to 36 V	397	400	403	mV
$V_{IT+(INA)}$	INA pin positive input threshold voltage	V_{DD} = 1.8 V to 36 V	400	405.5	413	mV
$V_{HYS(INA)}$	INA pin hysteresis voltage ($HYS = V_{IT+(INA)} – V_{IT-(INA)}$)		2	5.5	12	mV
$V_{IT-(INB)}$	INB pin negative input threshold voltage	V_{DD} = 1.8 V to 36 V	387	394.5	400	mV
$V_{IT+(INB)}$	INB pin positive input threshold voltage	V_{DD} = 1.8 V to 36 V	397	400	403	mV
$V_{HYS(INB)}$	INB pin hysteresis voltage ($HYS = V_{IT+(INB)} – V_{IT-(INB)}$)		2	5.2	12	mV
V_{OL}	Low-level output voltage	V_{DD} = 1.8 V, I_{OUT} = 3 mA		130	250	mV
		V_{DD} = 5 V, I_{OUT} = 5 mA		150	250	mV
I_{IN}	Input current (at INA, INB pins)	V_{DD} = 1.8 V and 36 V, V_{INA}, V_{INB} = 6.5 V	–25	+1	+25	nA
		V_{DD} = 1.8 V and 36 V, V_{INA}, V_{INB} = 0.1 V	–15	+1	+15	nA
$I_{D(leak)}$	Open-drain output leakage current	V_{DD} = 1.8 V and 36 V, V_{OUT} = 25 V		10	300	nA
I_{DD}	Supply current	V_{DD} = 1.8 V – 36 V		8	11	µA
UVLO	Undervoltage lockout(2)	V_{DD} falling	1.3	1.5	1.7	V

(1) The lowest supply voltage (V_{DD}) at which output is active; $t_{r(VDD)}$ > 15 µs/V. If less than $V_{(POR)}$, the output is undetermined.
(2) When V_{DD} falls below UVLO, OUTA is driven low and OUTB goes to high impedance. The outputs cannot be determined if less than $V_{(POR)}$.

6.6 Timing Requirements

PARAMETER		TEST CONDITION	MIN	TYP	MAX	UNIT
$t_{pd(HL)}$	High-to-low propagation delay(1)	V_{DD} = 24 V, ±10-mV input overdrive, R_L = 100 kΩ, V_{OH} = 0.9 × V_{DD}, V_{OL} = 250 mV		9.9		µs
$t_{pd(LH)}$	Low-to-high propagation delay(1)	V_{DD} = 24 V, ±10-mV input overdrive, R_L = 100 kΩ, V_{OH} = 0.9 × V_{DD}, V_{OL} = 250 mV		28.1		µs
$t_{d(start)}$(2)	Startup delay	V_{DD} = 5 V		155		µs
t_r	Output rise time	V_{DD} = 12 V, 10-mV input overdrive, R_L = 100 kΩ, C_L = 10 pF, V_O = (0.1 to 0.9) × V_{DD}		2.7		µs
t_f	Output fall time	V_{DD} = 12 V, 10-mV input overdrive, R_L = 100 kΩ, C_L = 10 pF, V_O = (0.9 to 0.1) × V_{DD}		0.12		µs

(1) High-to-low and low-to-high refers to the transition at the input pins (INA and INB).
(2) During power on, V_{DD} must exceed 1.8 V for at least 150 µs (typ) before the output state reflects the input condition.

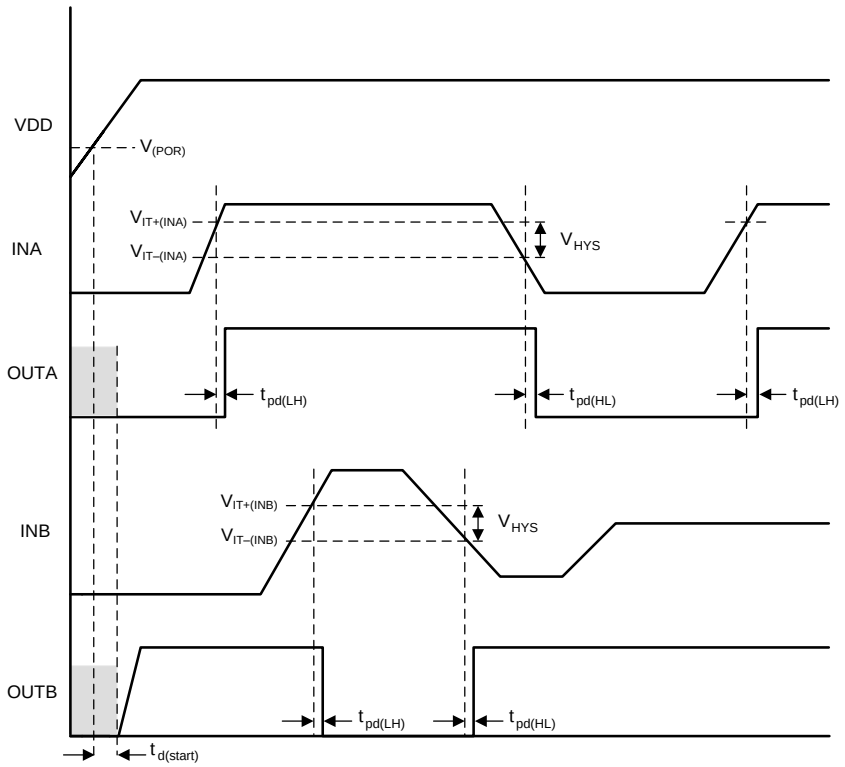

Figure 1. Timing Diagram

Copyright © 2014, Texas Instruments Incorporated

6.7 Typical Characteristics

At T_J = 25°C and V_{DD} = 12 V, unless otherwise noted.

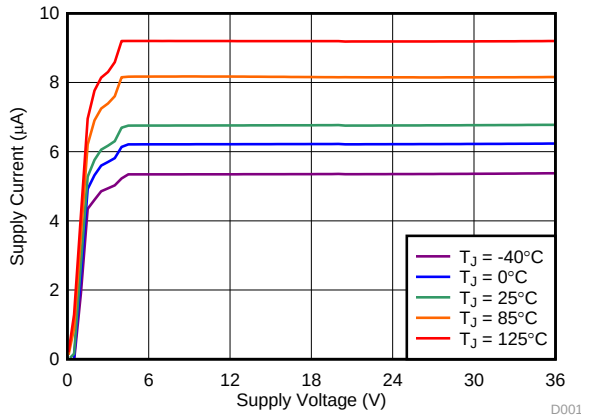

Figure 2. Supply Current vs Supply Voltage

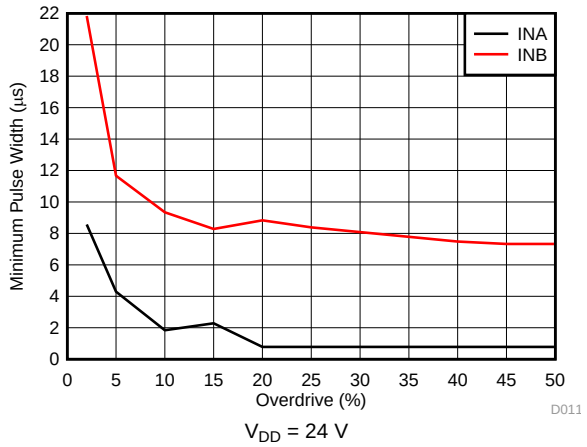

Figure 3. Minimum Pulse Duration vs Threshold Overdrive Voltage (1)

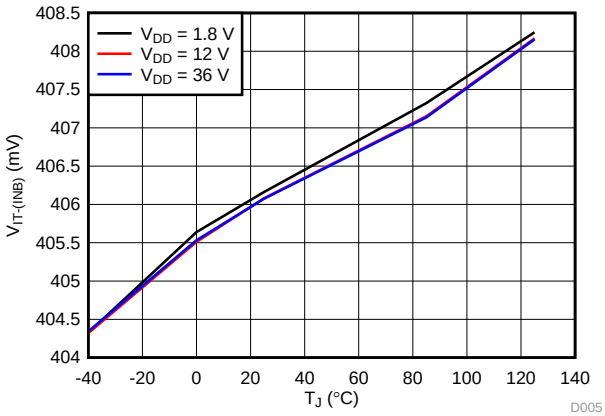

Figure 4. INA Positive Input Threshold Voltage ($V_{IT+(INA)}$) vs Temperature

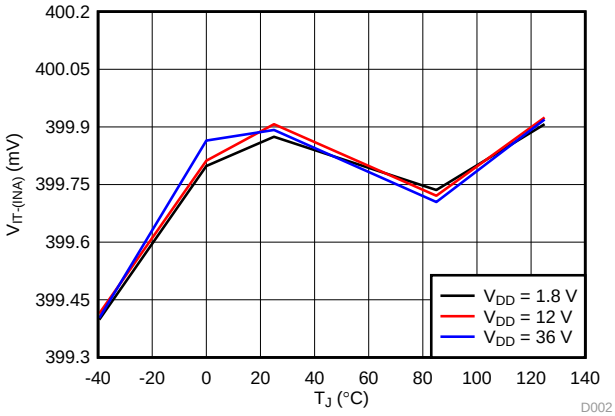

Figure 5. INA Negative Input Threshold Voltage ($V_{IT-(INA)}$) vs Temperature

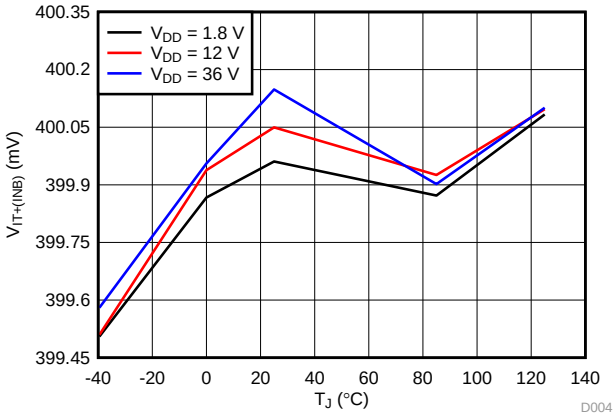

Figure 6. INB Positive Input Threshold Voltage ($V_{IT+(INB)}$) vs Temperature

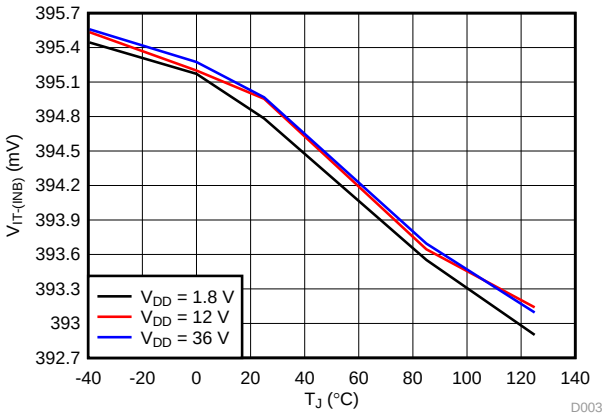

Figure 7. INB Negative Input Threshold Voltage ($V_{IT-(INB)}$) vs Temperature

(1) Minimum pulse duration required to trigger output high-to-low transition. INA = negative spike below V_{IT-} and INB = positive spike above V_{IT+}.

Copyright © 2014, Texas Instruments Incorporated

Typical Characteristics (continued)

At T_J = 25°C and V_{DD} = 12 V, unless otherwise noted.

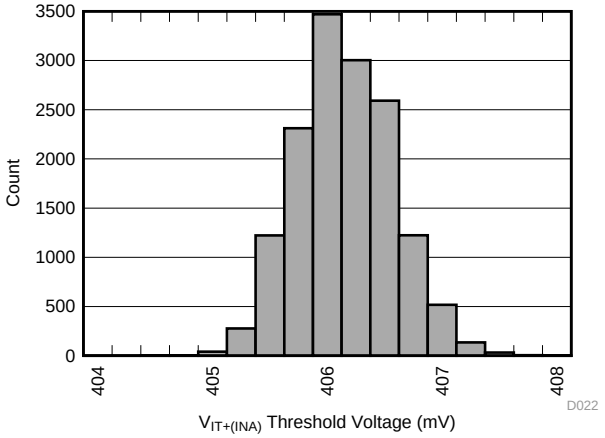

V_{DD} = 1.8 V

Figure 8. INA Positive Input Threshold Voltage ($V_{IT+(INA)}$) Distribution

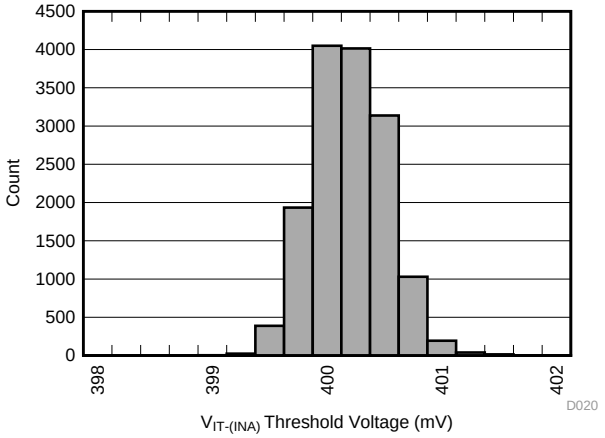

V_{DD} = 1.8 V

Figure 9. INA Negative Input Threshold Voltage ($V_{IT-(INA)}$) Distribution

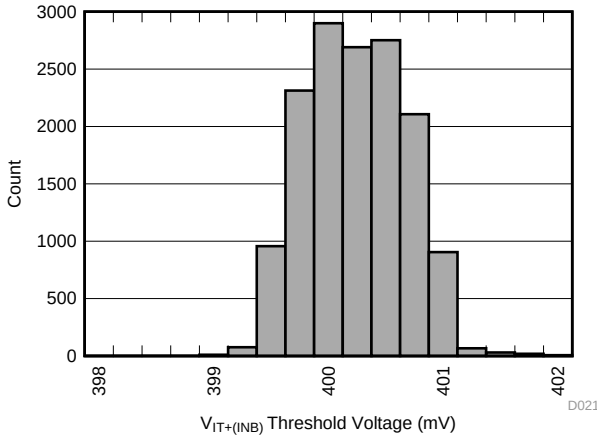

V_{DD} = 1.8 V

Figure 10. INB Positive Input Threshold Voltage ($V_{IT+(INB)}$) Distribution

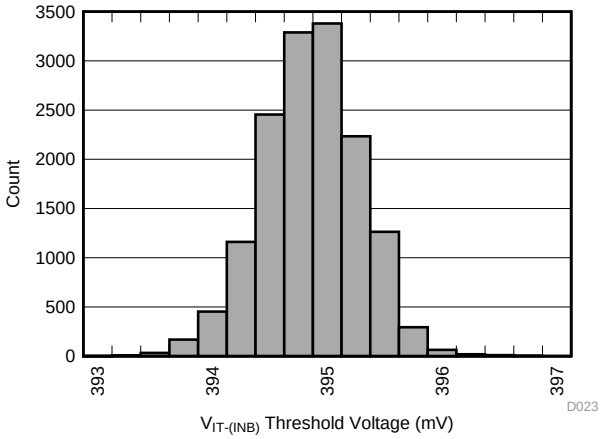

V_{DD} = 1.8 V

Figure 11. INB Negative Input Threshold Voltage ($V_{IT-(INB)}$) Distribution

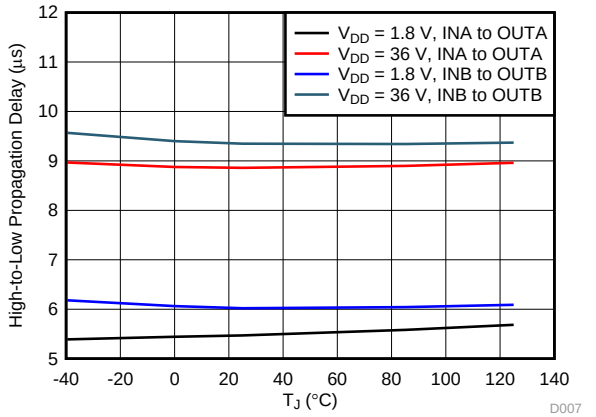

Input step ±200 mV

Figure 12. Propagation Delay vs Temperature (High-to-Low Transition at the Inputs)

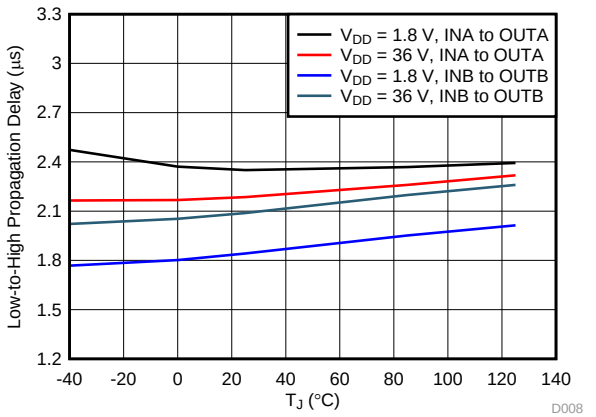

Input step ±200 mV

Figure 13. Propagation Delay vs Temperature (Low-to-High Transition at the Inputs)

Copyright © 2014, Texas Instruments Incorporated

Typical Characteristics (continued)

At T_J = 25°C and V_{DD} = 12 V, unless otherwise noted.

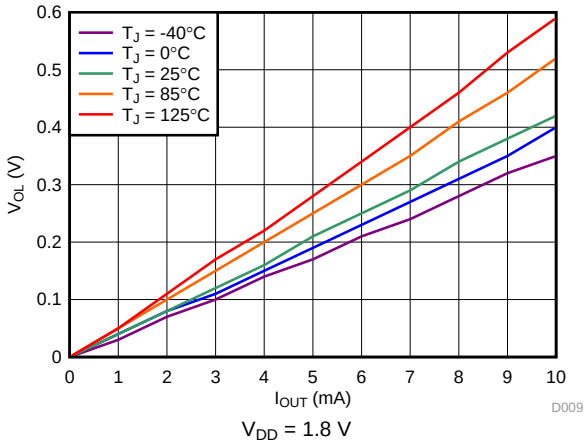

Figure 14. Output Voltage Low vs Output Sink Current

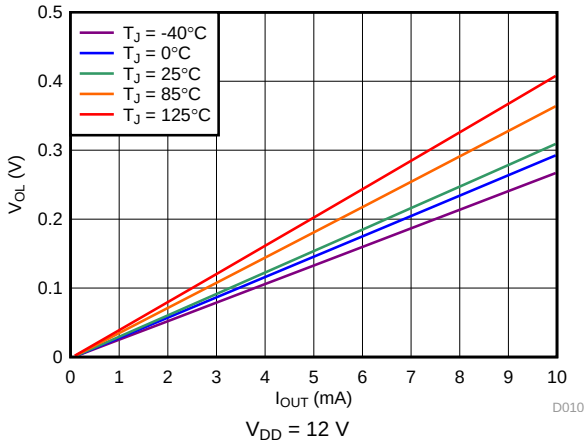

Figure 15. Output Voltage Low vs Output Sink Current

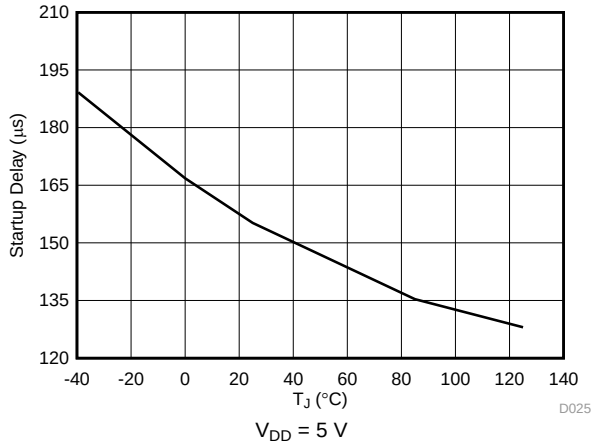

Figure 16. Startup Delay vs Temperature

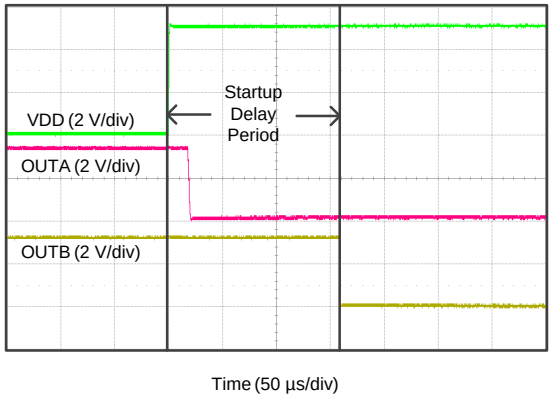

Figure 17. Startup Delay

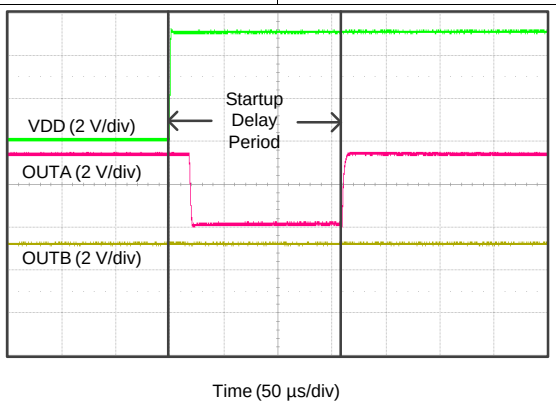

Figure 18. Startup Delay

7 Detailed Description

7.1 Overview

The TPS3701 combines two comparators (referred to as A and B) and a precision reference for over- and undervoltage detection. The TPS3701 features a wide supply voltage range (1.8 V to 36 V) and high-accuracy window threshold voltages of 400 mV (0.75% over temperature) with built-in hysteresis. The outputs are rated to 25 V and can sink up to 10 mA.

Set each input pin (INA, INB) to monitor any voltage above 0.4 V by using an external resistor divider network. Each input pin has very low input leakage current, allowing the use of large resistor dividers without sacrificing system accuracy. To form a window comparator, use the two input pins and three resistors (see the *Window Comparator Considerations* section). In this configuration, the TPS3701 is designed to assert the output signals when the monitored voltage is within the window band. Each input can also be used independently. The relationship between the inputs and the outputs is shown in Table 1. Broad voltage thresholds are supported that enable the device to be used in a wide array of applications.

Table 1. Truth Table

CONDITION	OUTPUT	STATUS
INA > $V_{IT+(INA)}$	OUTA high	Output A high impedance
INA < $V_{IT-(INA)}$	OUTA low	Output A asserted
INB > $V_{IT+(INB)}$	OUTB low	Output B asserted
INB < $V_{IT-(INB)}$	OUTB high	Output B high impedance

7.2 Functional Block Diagram

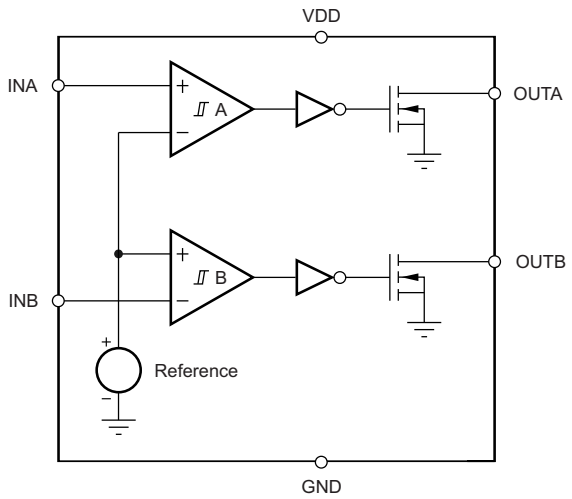

Copyright © 2014, Texas Instruments Incorporated

7.3 Feature Description

7.3.1 Inputs (INA, INB)

The TPS3701 combines two comparators with a precision reference voltage. Each comparator has one external input; the other input is connected to the internal reference. The rising threshold on INB and the falling threshold on INA are designed and trimmed to be equal to the reference voltage (400 mV). This configuration optimizes the device accuracy when used as a window comparator. Both comparators also have built-in hysteresis that proves immunity to noise and ensures stable operation.

The comparator inputs swings from ground to 1.7 V (7.0 V absolute maximum), regardless of the device supply voltage used. Although not required in most cases, it is good analog design practice to place a 1-nF to 10-nF bypass capacitor at the comparator input for noisy applications in order to reduce sensitivity to transient voltage changes on the monitored signal.

For comparator A, the corresponding output (OUTA) is driven to logic low when the input INA voltage drops below $V_{IT-(INA)}$. When the voltage exceeds $V_{IT+(INA)}$, OUTA goes to a high-impedance state; see Figure 1.

For comparator B, the corresponding output (OUTB) is driven to logic low when the voltage at input INB exceeds $V_{IT+(INB)}$. When the voltage drops below $V_{IT-(INB)}$ OUTB goes to a high-impedance state; see Figure 1. Together, these two comparators form a window-detection function as described in the *Window Comparator Considerations* section.

7.3.2 Outputs (OUTA, OUTB)

In a typical TPS3701 application, the outputs are connected to a reset or enable input of the processor [such as a digital signal processor (DSP), application-specific integrated circuit (ASIC), or other processor type] or the outputs are connected to the enable input of a voltage regulator [such as a dc-dc converter or low-dropout regulator (LDO)].

The TPS3701 provides two open-drain outputs (OUTA and OUTB); use pullup resistors to hold these lines high when the output goes to a high-impedance state. Connect pullup resistors to the proper voltage rails to enable the outputs to be connected to other devices at correct interface voltage levels. The TPS3701 outputs can be pulled up to 25 V, independent of the device supply voltage. To ensure proper voltage levels, give some consideration when choosing the pullup resistor values. The pullup resistor value is determined by V_{OL}, output capacitive loading, and output leakage current ($I_{D(leak)}$). These values are specified in the *Electrical Characteristics* table. Use wired-OR logic to merge OUTA and OUTB into one logic signal.

Table 1 and the *Inputs (INA, INB)* section describe how the outputs are asserted or high impedance. See Figure 1 for a timing diagram that describes the relationship between threshold voltages and the respective output.

7.4 Device Functional Modes

7.4.1 Normal Operation (V_{DD} > UVLO)

When the voltage on VDD is greater than 1.8 V for at least 155 µs, the OUTA and OUTB signals correspond to the voltage on INA and INB as listed in Table 1.

7.4.2 Undervoltage Lockout ($V_{(POR)} < V_{DD}$ < UVLO)

When the voltage on VDD is less than the device UVLO voltage, and greater than the power-on reset voltage, $V_{(POR)}$, the OUTA and OUTB signals are asserted and high impedance, respectively, regardless of the voltage on INA and INB.

7.4.3 Power On Reset ($V_{DD} < V_{(POR)}$)

When the voltage on VDD is lower than the required voltage to internally pull the asserted output to GND ($V_{(POR)}$), both outputs are in a high-impedance state.

8 Application and Implementation

NOTE

Information in the following applications sections is not part of the TI component specification, and TI does not warrant its accuracy or completeness. TI's customers are responsible for determining suitability of components for their purposes. Customers should validate and test their design implementation to confirm system functionality.

8.1 Application Information

The TPS3701 is used as a precision dual-voltage supervisor in several different configurations. The monitored voltage (V_{MON}), VDD voltage, and output pullup voltage can be independent voltages or connected in any configuration. The following sections show the connection configurations and the voltage limitations for each configuration.

8.1.1 Window Comparator Considerations

The inverting and noninverting configuration of the comparators forms a window-comparator detection circuit using a resistor divider network, as shown in Figure 19 and Figure 20. The input pins can monitor any system voltage above 400 mV with the use of a resistor divider network. INA and INB monitor for undervoltage and overvoltage conditions, respectively.

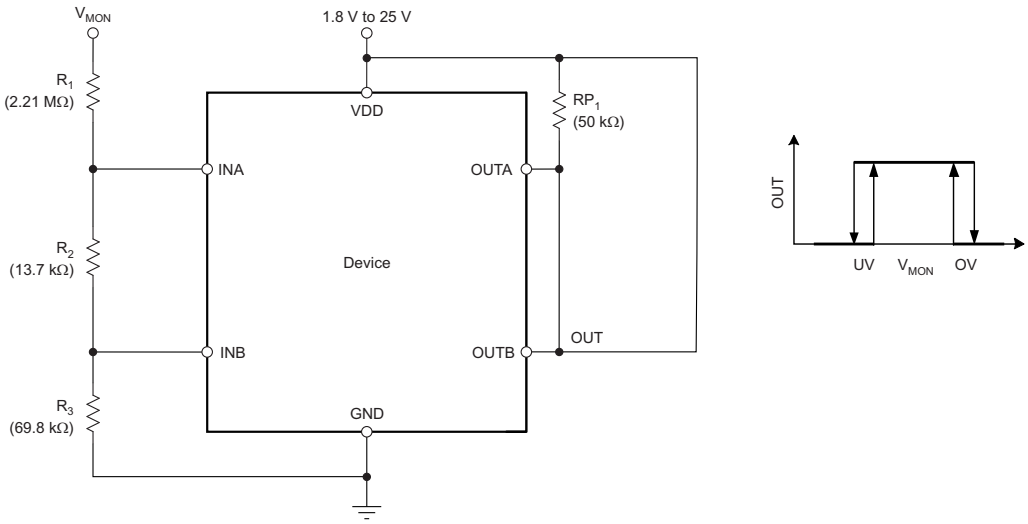

Figure 19. Window Comparator Block Diagram

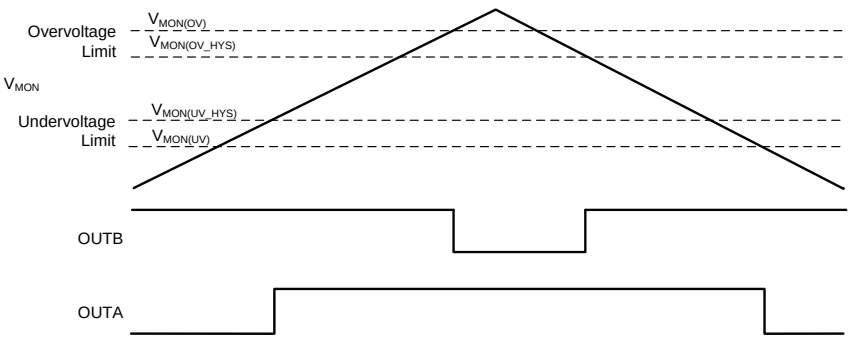

Figure 20. Window Comparator Timing Diagram

Copyright © 2014, Texas Instruments Incorporated

Application Information (continued)

The TPS3701 flags the overvoltage or undervoltage condition with the greatest accuracy. The highest accuracy threshold voltages are $V_{IT-(INA)}$ and $V_{IT+(INB)}$, and correspond with the falling undervoltage flag, and the rising overvoltage flag, respectively. These thresholds represent the accuracy when the monitored voltage is within the valid window (both OUTA and OUTB are in a high-impedance state), and correspond to the $V_{MON(UV)}$ and $V_{MON(OV)}$ trigger voltages, respectively. If the monitored voltage is outside of the valid window (V_{MON} is less than the undervoltage limit, $V_{MON(UV)}$, or greater than overvoltage limit, $V_{MON(OV)}$), then the input threshold voltages to re-enter the valid window are $V_{IT+(INA)}$ or $V_{IT-(INB)}$, and correspond with the $V_{MON(UV_HYS)}$ and $V_{MON(OV_HYS)}$ monitored voltages, respectively.

The resistor divider values and target threshold voltage can be calculated by using Equation 1 through Equation 4:

$$R_{TOTAL} = R_1 + R_2 + R_3 \quad (1)$$

Choose an R_{TOTAL} value so that the current through the divider is approximately 100 times higher than the input current at the INA and INB pins. Resistors with high values minimize current consumption; however, the input bias current degrades accuracy if the current through the resistors is too low. See application report *SLVA450, Optimizing Resistor Dividers at a Comparator Input*, for details on sizing input resistors.

R_3 is determined by Equation 2:

$$R_3 = \frac{R_{TOTAL}}{V_{MON(OV)}} \bullet V_{IT+(INB)}$$

where

- $V_{MON(OV)}$ is the target voltage at which an overvoltage condition is detected. (2)

R_2 is determined by either Equation 3 or Equation 4:

$$R_2 = \left(\frac{R_{TOTAL}}{V_{MON(UV_HYS)}} \bullet V_{IT+(INA)} \right) - R_3$$

where

- $V_{MON(UV_HYS)}$ is the target voltage at which an undervoltage condition is removed as V_{MON} rises. (3)

$$R_2 = \left(\frac{R_{TOTAL}}{V_{MON(UV)}} \bullet V_{IT-(INA)} \right) - R_3$$

where

- $V_{MON(UV)}$ is the target voltage at which an undervoltage condition is detected. (4)

8.1.2 Input and Output Configurations

Figure 21 to Figure 24 show examples of the various input and output configurations.

Distributor of Texas Instruments: Excellent Integrated System Limited
Datasheet of TPS3701DDCT - IC COMPARATOR WINDOW 6SOT
Contact us: sales@integrated-circuit.com Website: www.integrated-circuit.com

Application Information (continued)

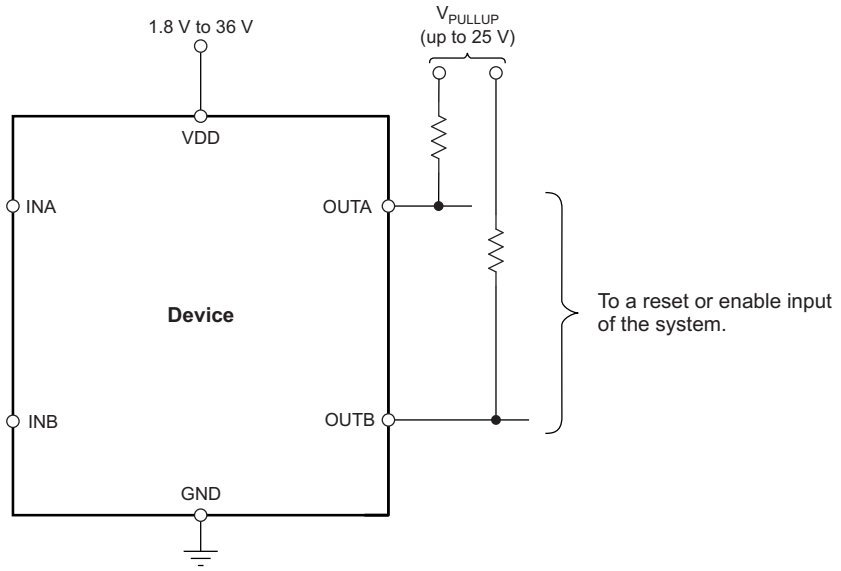

Figure 21. Interfacing to Voltages Other than V_{DD}

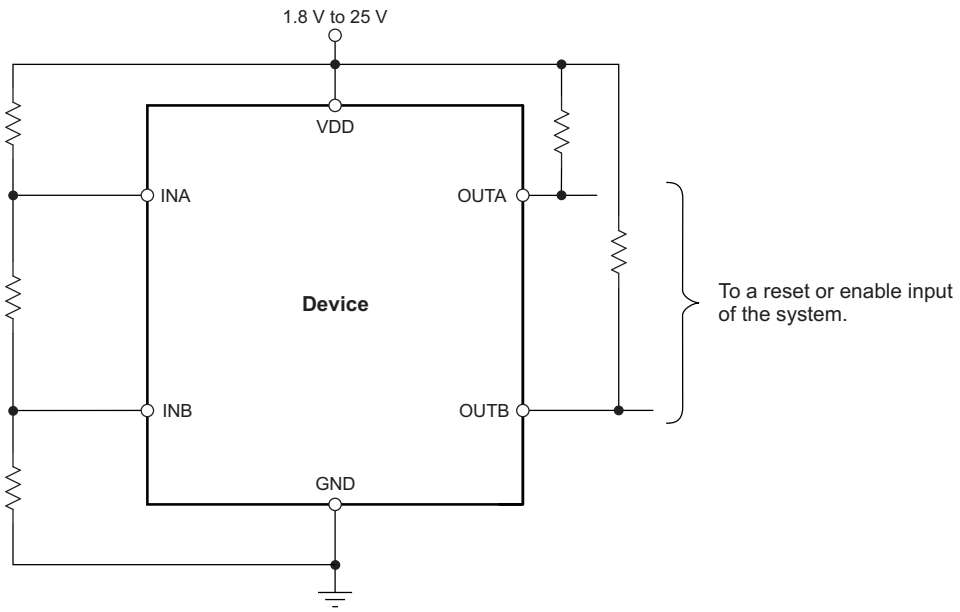

Figure 22. Monitoring the Same Voltage as V_{DD}

Copyright © 2014, Texas Instruments Incorporated

Application Information (continued)

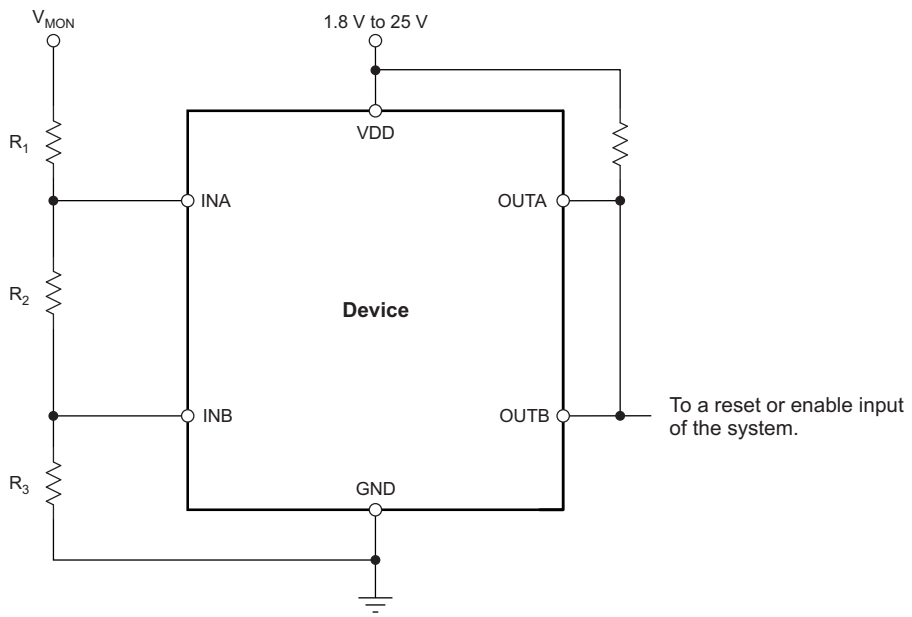

NOTE: The inputs can monitor a voltage higher than V_{DD} (max) with the use of an external resistor divider network.

Figure 23. Monitoring a Voltage Other than V_{DD}

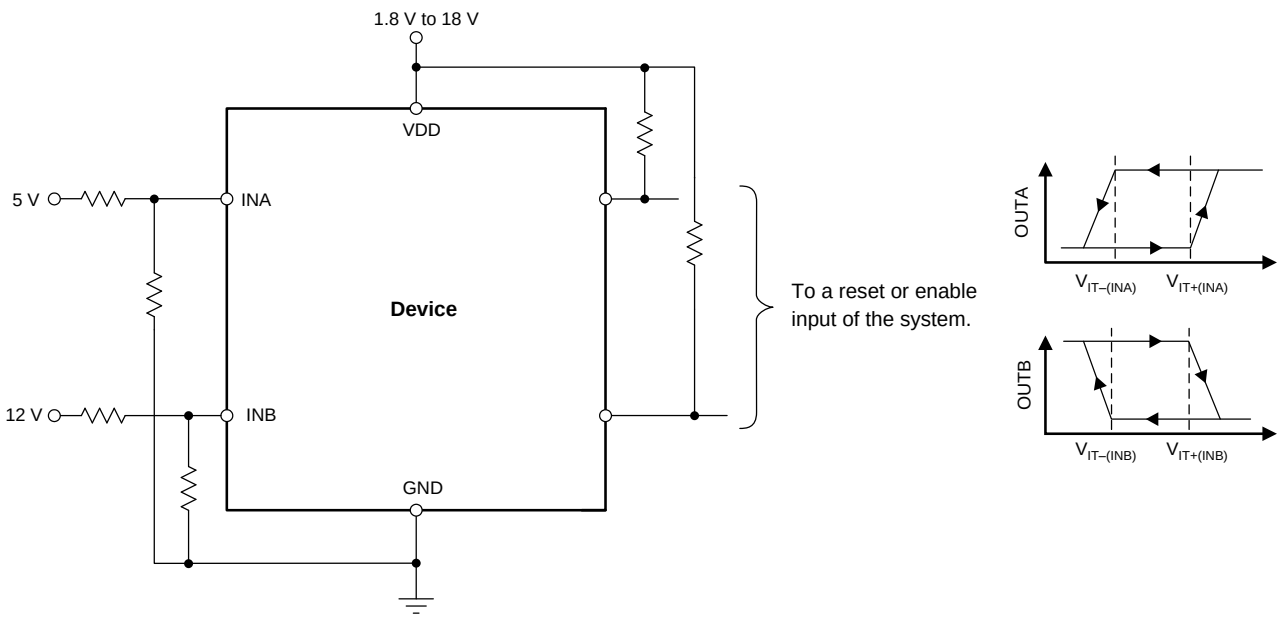

NOTE: In this case, OUTA is driven low when an undervoltage condition is detected at the 5-V rail and OUTB is driven low when an overvoltage condition is detected at the 12-V rail.

Figure 24. Monitoring Overvoltage for One Rail and Undervoltage for a Different Rail

8.1.3 Immunity to Input Pin Voltage Transients

The TPS3701 is immune to short voltage transient spikes on the input pins. Sensitivity to transients depends on both transient duration and amplitude; see Figure 3, *Minimum Pulse Duration vs Threshold Overdrive Voltage*.

8.2 Typical Application

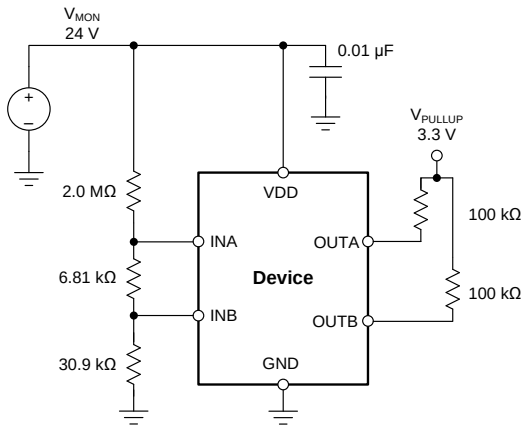

Figure 25. 24-V, 10% Window Comparator

8.2.1 Design Requirements

Table 2. Design Parameters

PARAMETER	DESIGN REQUIREMENT	DESIGN RESULT
Monitored voltage	24-V nominal, rising ($V_{MON(OV)}$) and falling ($V_{MON(UV)}$) threshold ±10% nominal (26.4 V and 21.6 V, respectively)	$V_{MON(OV)}$ = 26.4 V ±2.7%, $V_{MON(UV)}$ = 21.6 V ±2.7%
Output logic voltage	3.3-V CMOS	3.3-V CMOS
Maximum current consumption	30 µA	24 µA

8.2.2 Detailed Design Procedure

1. Determine the minimum total resistance of the resistor network necessary to achieve the current consumption specification by using Equation 1. For this example, the current flow through the resistor network was chosen to be 13 µA; a lower current can be selected, however, care should be taken to avoid leakage currents that are artifacts of the manufacturing process. Leakage currents significantly impact the accuracy if they are greater than 1% of the resistor network current.

$$R_{TOTAL} = \frac{V_{MON(OV)}}{I} = \frac{26.4\ V}{13\ \mu A} = 2.03\ M\Omega$$

where

- $V_{MON(OV)}$ is the target voltage at which an overvoltage condition is detected as V_{MON} rises.
- I is the current flowing through the resistor network. (5)

2. After R_{TOTAL} is determined, R_3 can be calculated using Equation 6. Select the nearest 1% resistor value for R_3. In this case, 30.9 kΩ is the closest value.

$$R_3 = \frac{R_{TOTAL}}{V_{MON(OV)}} \bullet V_{IT+(INB)} = \frac{2.03\ M\Omega}{26.4\ V} \bullet 0.4\ V = 30.7\ k\Omega \quad (6)$$

3. Use Equation 7 to calculate R2. Select the nearest 1% resistor value for R_2. In this case, 6.81 kΩ is the closest value.

$$R_2 = \frac{R_{TOTAL}}{V_{MON(UV)}} \bullet V_{IT-(INA+)} - R_3 = \frac{2.03\ M\Omega}{21.6\ V} \bullet 0.4\ V - 30.9\ k\Omega = 6.69\ k\Omega \quad (7)$$

4. Use Equation 8 to calculate R1. Select the nearest 1% resistor value for R_1. In this case, 2 MΩ is the closest value.

$$R_1 = R_{TOTAL} - R_2 - R_3 = 2.03\ M\Omega - 6.81\ k\Omega - 30.9\ k\Omega = 1.99\ M\Omega \quad (8)$$

Copyright © 2014, Texas Instruments Incorporated

5. The worst-case tolerance can be calculated by referring to Equation 13 in application report SLVA450, *Optimizing Resistor Dividers at a Comparator Input*. An example of the rising threshold error, $V_{MON(OV)}$, is given in Equation 9:

$$\% \text{ ACC} = \% \text{ TOL}(V_{IT+(INB)}) + 2 \bullet \left(1 - \frac{V_{IT+(INB)}}{V_{MON(OV)}}\right) \bullet \% \text{ TOL}_R = 0.75 \% + 2 \bullet \left(1 - \frac{0.4}{26.4}\right) \bullet 1\% = 2.72 \% \quad (9)$$

where

- % TOL($V_{IT+(INB)}$) is the tolerance of the INB positive threshold.
- % ACC is the total tolerance of the $V_{MON(OV)}$ voltage.
- % TOL_R is the tolerance of the resistors selected.

6. When the outputs switch to the high-Z state, the rise time of the OUTA or OUTB node depends on the pullup resistance and the capacitance on the node. Choose pullup resistors that satisfy the downstream timing requirements; 100-kΩ resistors are a good choice for low-capacitive loads.

8.2.3 Application Curves

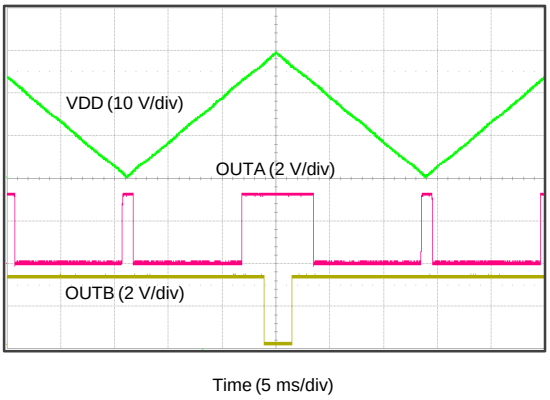

Figure 26. 24-V Window Monitor Output Response

9 Power Supply Recommendations

The TPS3701 has a 40-V absolute maximum rating on the VDD pin, with a recommended operating condition of 36 V. If the voltage supply that is providing power to VDD is susceptible to any large voltage transient that may exceed 40 V, or if the supply exhibits high voltage slew rates greater than 1 V/µs, take additional precautions. Place an RC filter between the supply and VDD to filter any high-frequency transient surges on the VDD pin. A 100-Ω resistor and 0.01-µF capacitor is required in these cases, as shown in Figure 27.

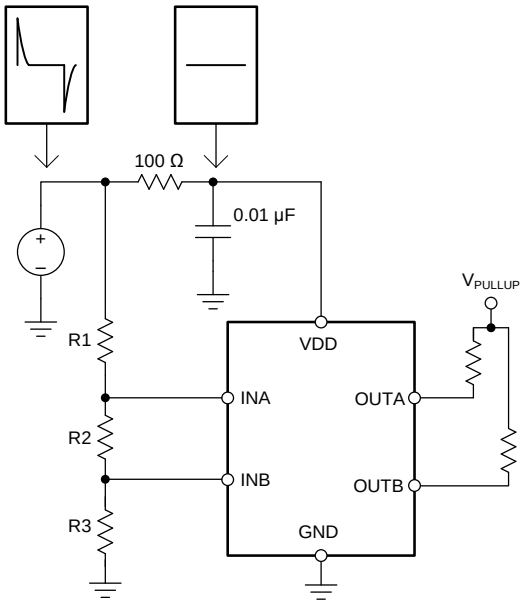

Figure 27. Using an RC Filter to Remove High-Frequency Disturbances on VDD

Copyright © 2014, Texas Instruments Incorporated

10 Layout

10.1 Layout Guidelines

- Place R_1, R_2, and R_3 close to the device to minimize noise coupling into the INA and INB nodes.
- Place the VDD decoupling capacitor close to the device.
- Avoid using long traces for the VDD supply node. The VDD capacitor (C_{VDD}), along with parasitic inductance from the supply to the capacitor, may form an LC tank and create ringing with peak voltages above the maximum VDD voltage. If this is unavoidable, see Figure 27 for an example of filtering VDD.

10.2 Layout Example

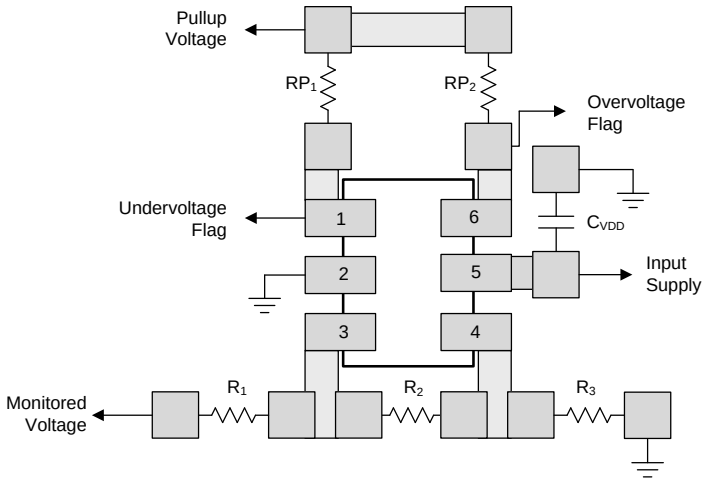

Figure 28. Recommended Layout

11 Device and Documentation Support

11.1 Documentation Support

11.1.1 Related Documentation

For related documentation see the following application reports and user guide (available through the TI website):

- Application report SLVA600—*Using the TPS3700 as a Negative Rail Over- and Undervoltage Detector*.
- Application report SLVA450—*Optimizing Resistor Dividers at a Comparator Input*.
- User guide SLVU683—*TPS3700EVM-114 Evaluation Module*.

11.2 Trademarks

All trademarks are the property of their respective owners.

11.3 Electrostatic Discharge Caution

This integrated circuit can be damaged by ESD. Texas Instruments recommends that all integrated circuits be handled with appropriate precautions. Failure to observe proper handling and installation procedures can cause damage.

ESD damage can range from subtle performance degradation to complete device failure. Precision integrated circuits may be more susceptible to damage because very small parametric changes could cause the device not to meet its published specifications.

11.4 Glossary

SLYZ022 — *TI Glossary*.

This glossary lists and explains terms, acronyms, and definitions.

12 Mechanical, Packaging, and Orderable Information

The following pages include mechanical, packaging, and orderable information. This information is the most current data available for the designated devices. This data is subject to change without notice and revision of this document. For browser-based versions of this data sheet, refer to the left-hand navigation.

Copyright © 2014, Texas Instruments Incorporated

Distributor of Texas Instruments: Excellent Integrated System Limited
Datasheet of TPS3701DDCT - IC COMPARATOR WINDOW 6SOT
Contact us: sales@integrated-circuit.com Website: www.integrated-circuit.com

PACKAGE OPTION ADDENDUM

PACKAGING INFORMATION

Orderable Device	Status (1)	Package Type	Package Drawing	Pins	Package Qty	Eco Plan (2)	Lead/Ball Finish (6)	MSL Peak Temp (3)	Op Temp (°C)	Device Marking (4/5)	Samples
TPS3701DDCR	ACTIVE	SOT	DDC	6	3000	Green (RoHS & no Sb/Br)	CU NIPDAU	Level-2-260C-1 YEAR		ZABO	Samples
TPS3701DDCT	ACTIVE	SOT	DDC	6	250	Green (RoHS & no Sb/Br)	CU NIPDAU	Level-2-260C-1 YEAR		ZABO	Samples

(1) The marketing status values are defined as follows:
ACTIVE: Product device recommended for new designs.
LIFEBUY: TI has announced that the device will be discontinued, and a lifetime-buy period is in effect.
NRND: Not recommended for new designs. Device is in production to support existing customers, but TI does not recommend using this part in a new design.
PREVIEW: Device has been announced but is not in production. Samples may or may not be available.
OBSOLETE: TI has discontinued the production of the device.

(2) Eco Plan - The planned eco-friendly classification: Pb-Free (RoHS), Pb-Free (RoHS Exempt), or Green (RoHS & no Sb/Br) - please check http://www.ti.com/productcontent for the latest availability information and additional product content details.
TBD: The Pb-Free/Green conversion plan has not been defined.
Pb-Free (RoHS): TI's terms "Lead-Free" or "Pb-Free" mean semiconductor products that are compatible with the current RoHS requirements for all 6 substances, including the requirement that lead not exceed 0.1% by weight in homogeneous materials. Where designed to be soldered at high temperatures, TI Pb-Free products are suitable for use in specified lead-free processes.
Pb-Free (RoHS Exempt): This component has a RoHS exemption for either 1) lead-based flip-chip solder bumps used between the die and package, or 2) lead-based die adhesive used between the die and leadframe. The component is otherwise considered Pb-Free (RoHS compatible) as defined above.
Green (RoHS & no Sb/Br): TI defines "Green" to mean Pb-Free (RoHS compatible), and free of Bromine (Br) and Antimony (Sb) based flame retardants (Br or Sb do not exceed 0.1% by weight in homogeneous material)

(3) MSL, Peak Temp. - The Moisture Sensitivity Level rating according to the JEDEC industry standard classifications, and peak solder temperature.

(4) There may be additional marking, which relates to the logo, the lot trace code information, or the environmental category on the device.

(5) Multiple Device Markings will be inside parentheses. Only one Device Marking contained in parentheses and separated by a "~" will appear on a device. If a line is indented then it is a continuation of the previous line and the two combined represent the entire Device Marking for that device.

(6) Lead/Ball Finish - Orderable Devices may have multiple material finish options. Finish options are separated by a vertical ruled line. Lead/Ball Finish values may wrap to two lines if the finish value exceeds the maximum column width.

Important Information and Disclaimer: The information provided on this page represents TI's knowledge and belief as of the date that it is provided. TI bases its knowledge and belief on information provided by third parties, and makes no representation or warranty as to the accuracy of such information. Efforts are underway to better integrate information from third parties. TI has taken and continues to take reasonable steps to provide representative and accurate information but may not have conducted destructive testing or chemical analysis on incoming materials and chemicals. TI and TI suppliers consider certain information to be proprietary, and thus CAS numbers and other limited information may not be available for release.

Distributor of Texas Instruments: Excellent Integrated System Limited
Datasheet of TPS3701DDCT - IC COMPARATOR WINDOW 6SOT
Contact us: sales@integrated-circuit.com Website: www.integrated-circuit.com

In no event shall TI's liability arising out of such information exceed the total purchase price of the TI part(s) at issue in this document sold by TI to Customer on an annual basis.

PACKAGE MATERIALS INFORMATION

www.ti.com 16-Dec-2014

TAPE AND REEL INFORMATION

REEL DIMENSIONS

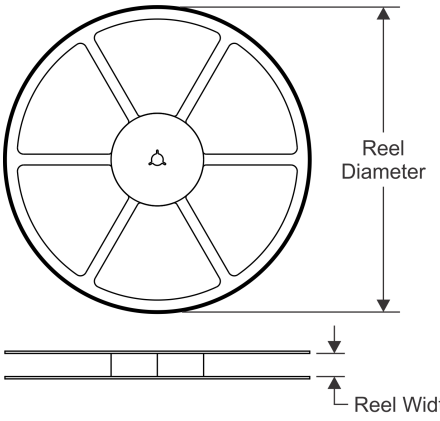

TAPE DIMENSIONS

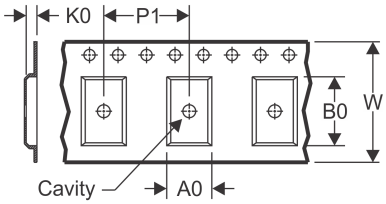

A0	Dimension designed to accommodate the component width
B0	Dimension designed to accommodate the component length
K0	Dimension designed to accommodate the component thickness
W	Overall width of the carrier tape
P1	Pitch between successive cavity centers

QUADRANT ASSIGNMENTS FOR PIN 1 ORIENTATION IN TAPE

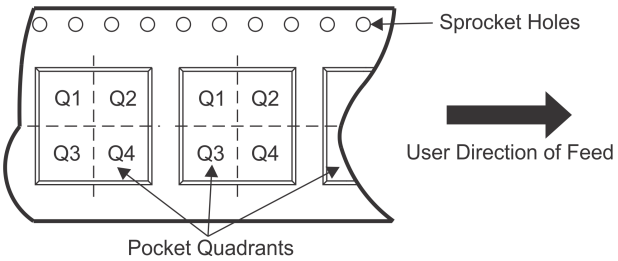

*All dimensions are nominal

Device	Package Type	Package Drawing	Pins	SPQ	Reel Diameter (mm)	Reel Width W1 (mm)	A0 (mm)	B0 (mm)	K0 (mm)	P1 (mm)	W (mm)	Pin1 Quadrant
TPS3701DDCR	SOT	DDC	6	3000	179.0	8.4	3.2	3.2	1.4	4.0	8.0	Q3
TPS3701DDCT	SOT	DDC	6	250	179.0	8.4	3.2	3.2	1.4	4.0	8.0	Q3

PACKAGE MATERIALS INFORMATION

www.ti.com 16-Dec-2014

TAPE AND REEL BOX DIMENSIONS

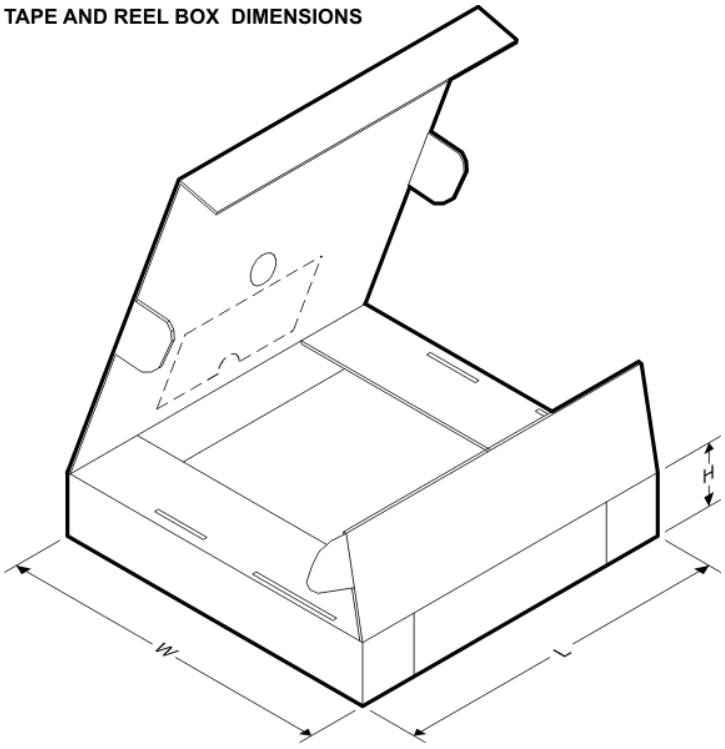

*All dimensions are nominal

Device	Package Type	Package Drawing	Pins	SPQ	Length (mm)	Width (mm)	Height (mm)
TPS3701DDCR	SOT	DDC	6	3000	195.0	200.0	45.0
TPS3701DDCT	SOT	DDC	6	250	195.0	200.0	45.0

MECHANICAL DATA

DDC (R–PDSO–G6) PLASTIC SMALL–OUTLINE

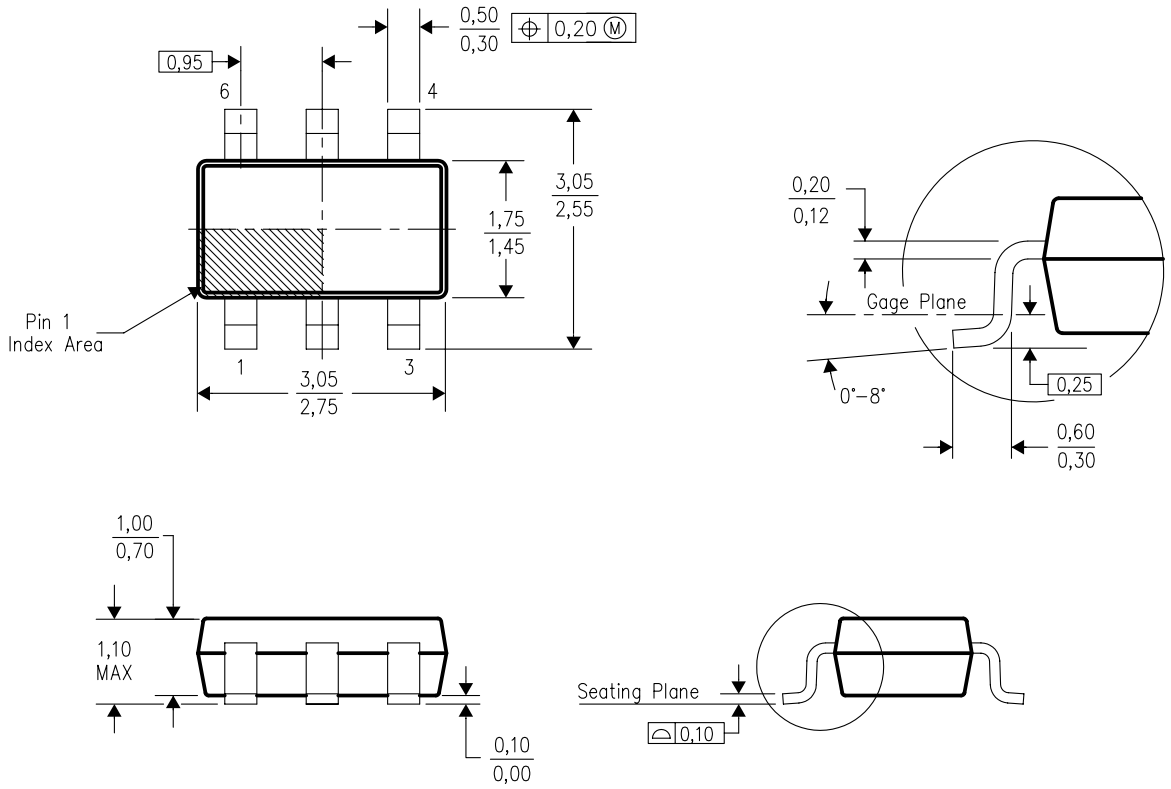

4204403–3/E 06/05

NOTES:
A. All linear dimensions are in millimeters.
B. This drawing is subject to change without notice.
C. Body dimensions do not include mold flash or protrusion.
D. Falls within JEDEC MO–193 variation AA (6 pin).

LAND PATTERN DATA

DDC (R-PDSO-G6) PLASTIC SMALL OUTLINE

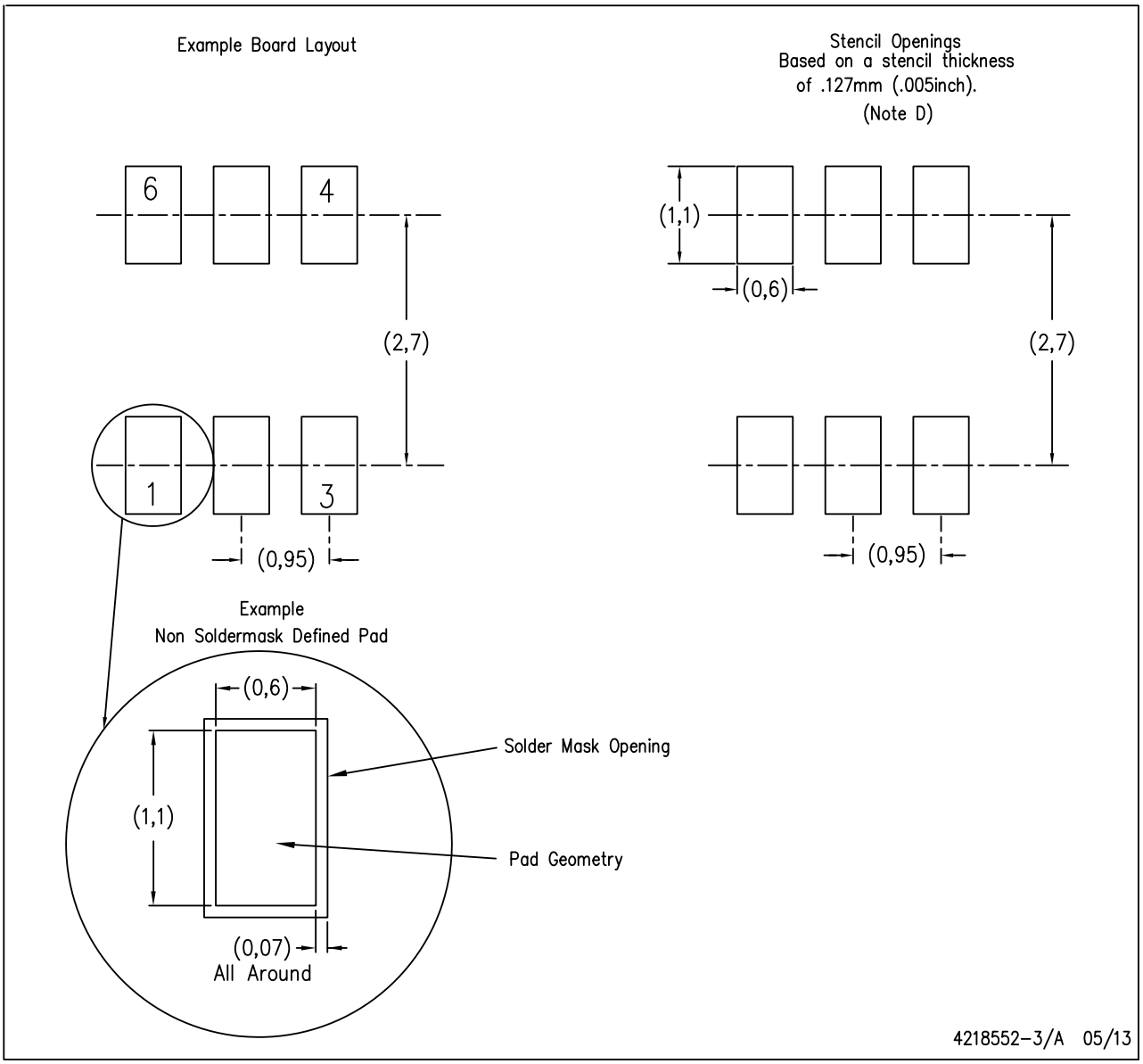

NOTES:
A. All linear dimensions are in millimeters.
B. This drawing is subject to change without notice.
C. Publication IPC-7351 is recommended for alternate designs.
D. Laser cutting apertures with trapezoidal walls and also rounding corners will offer better paste release. Customers should contact their board assembly site for stencil design recommendations. Example stencil design based on a 50% volumetric metal load solder paste. Refer to IPC-7525 for other stencil recommendations.

IMPORTANT NOTICE

Texas Instruments Incorporated and its subsidiaries (TI) reserve the right to make corrections, enhancements, improvements and other changes to its semiconductor products and services per JESD46, latest issue, and to discontinue any product or service per JESD48, latest issue. Buyers should obtain the latest relevant information before placing orders and should verify that such information is current and complete. All semiconductor products (also referred to herein as “components”) are sold subject to TI’s terms and conditions of sale supplied at the time of order acknowledgment.

TI warrants performance of its components to the specifications applicable at the time of sale, in accordance with the warranty in TI’s terms and conditions of sale of semiconductor products. Testing and other quality control techniques are used to the extent TI deems necessary to support this warranty. Except where mandated by applicable law, testing of all parameters of each component is not necessarily performed.

TI assumes no liability for applications assistance or the design of Buyers’ products. Buyers are responsible for their products and applications using TI components. To minimize the risks associated with Buyers’ products and applications, Buyers should provide adequate design and operating safeguards.

TI does not warrant or represent that any license, either express or implied, is granted under any patent right, copyright, mask work right, or other intellectual property right relating to any combination, machine, or process in which TI components or services are used. Information published by TI regarding third-party products or services does not constitute a license to use such products or services or a warranty or endorsement thereof. Use of such information may require a license from a third party under the patents or other intellectual property of the third party, or a license from TI under the patents or other intellectual property of TI.

Reproduction of significant portions of TI information in TI data books or data sheets is permissible only if reproduction is without alteration and is accompanied by all associated warranties, conditions, limitations, and notices. TI is not responsible or liable for such altered documentation. Information of third parties may be subject to additional restrictions.

Resale of TI components or services with statements different from or beyond the parameters stated by TI for that component or service voids all express and any implied warranties for the associated TI component or service and is an unfair and deceptive business practice. TI is not responsible or liable for any such statements.

Buyer acknowledges and agrees that it is solely responsible for compliance with all legal, regulatory and safety-related requirements concerning its products, and any use of TI components in its applications, notwithstanding any applications-related information or support that may be provided by TI. Buyer represents and agrees that it has all the necessary expertise to create and implement safeguards which anticipate dangerous consequences of failures, monitor failures and their consequences, lessen the likelihood of failures that might cause harm and take appropriate remedial actions. Buyer will fully indemnify TI and its representatives against any damages arising out of the use of any TI components in safety-critical applications.

In some cases, TI components may be promoted specifically to facilitate safety-related applications. With such components, TI’s goal is to help enable customers to design and create their own end-product solutions that meet applicable functional safety standards and requirements. Nonetheless, such components are subject to these terms.

No TI components are authorized for use in FDA Class III (or similar life-critical medical equipment) unless authorized officers of the parties have executed a special agreement specifically governing such use.

Only those TI components which TI has specifically designated as military grade or “enhanced plastic” are designed and intended for use in military/aerospace applications or environments. Buyer acknowledges and agrees that any military or aerospace use of TI components which have ***not*** been so designated is solely at the Buyer's risk, and that Buyer is solely responsible for compliance with all legal and regulatory requirements in connection with such use.

TI has specifically designated certain components as meeting ISO/TS16949 requirements, mainly for automotive use. In any case of use of non-designated products, TI will not be responsible for any failure to meet ISO/TS16949.

Products		**Applications**	
Audio	www.ti.com/audio	Automotive and Transportation	www.ti.com/automotive
Amplifiers	amplifier.ti.com	Communications and Telecom	www.ti.com/communications
Data Converters	dataconverter.ti.com	Computers and Peripherals	www.ti.com/computers
DLP® Products	www.dlp.com	Consumer Electronics	www.ti.com/consumer-apps
DSP	dsp.ti.com	Energy and Lighting	www.ti.com/energy
Clocks and Timers	www.ti.com/clocks	Industrial	www.ti.com/industrial
Interface	interface.ti.com	Medical	www.ti.com/medical
Logic	logic.ti.com	Security	www.ti.com/security
Power Mgmt	power.ti.com	Space, Avionics and Defense	www.ti.com/space-avionics-defense
Microcontrollers	microcontroller.ti.com	Video and Imaging	www.ti.com/video
RFID	www.ti-rfid.com		
OMAP Applications Processors	www.ti.com/omap	**TI E2E Community**	e2e.ti.com
Wireless Connectivity	www.ti.com/wirelessconnectivity		

Mailing Address: Texas Instruments, Post Office Box 655303, Dallas, Texas 75265
Copyright © 2014, Texas Instruments Incorporated