# Excellent Integrated System Limited

Stocking Distributor

Click to view price, real time Inventory, Delivery & Lifecycle Information:

FCI
10107844-001LF

For any questions, you can email us directly:
sales@integrated-circuit.com

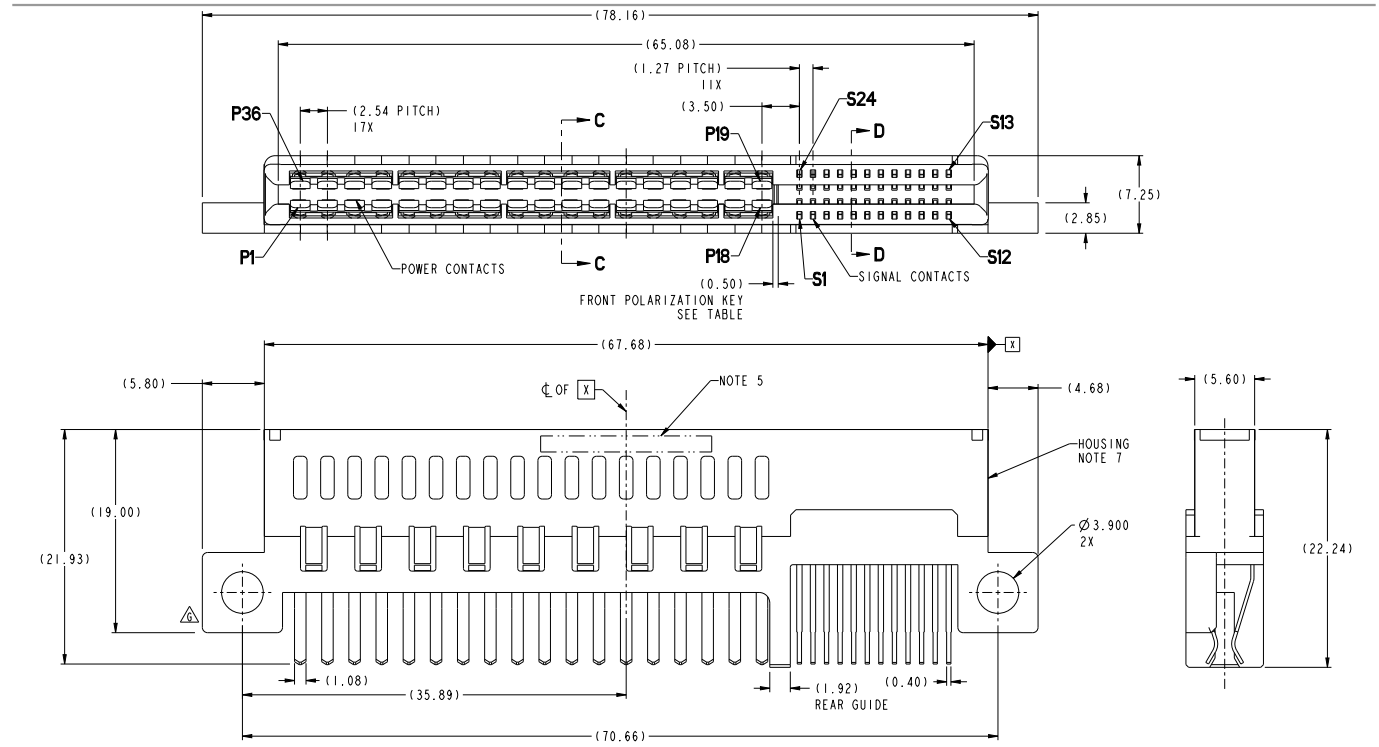


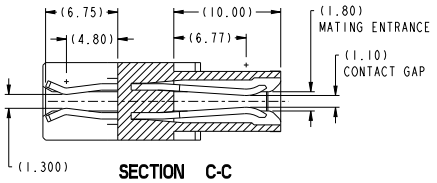


SECTION C-C

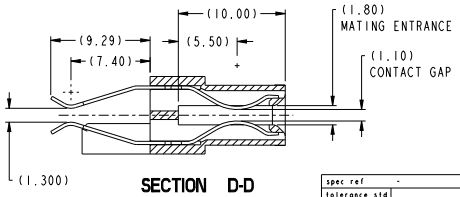


SECTION D-D

| | | | | | | | |
|---|---|---|---|---|---|---|---|
| spec ref - | | dr | Tim Hsuiz | 2008/10/21 | projection | MM | size A2 / scale 4:1 |
| tolerance std - ASME Y14.5 | TOLERANCES UNLESS OTHERWISE SPECIFIED | eng | Wei-Long Zhang | 2012/09/05 | | | ecn no ELX-001-012701-1 |
| | | chr | - | - | | | |
| | | appr | Pei-Ming Zheng | 2012/09/11 | product family | CARD EDGE | ref level Released |
| surface - ✓ | linear 0.X ±0.30 / 0.XX ±0.10 / 0.XXX ±0.05 | FCI | title | HPCE-STRADDLE MT (36P-24S) (RECEPTACLE) SPECIAL CASE | dwg no | 10107844 | rev G |
| ASME Y14.5 | angular 0° ±2° | www.fci.com | cat. no. - | | Product - Customer Drw | | sheet 1 of 6 |



Copyright FCI.

## NEW RECOMENDED HOST BOARD LAYOUT FOR IMPROVED SOLDER REFLOW PROCESS

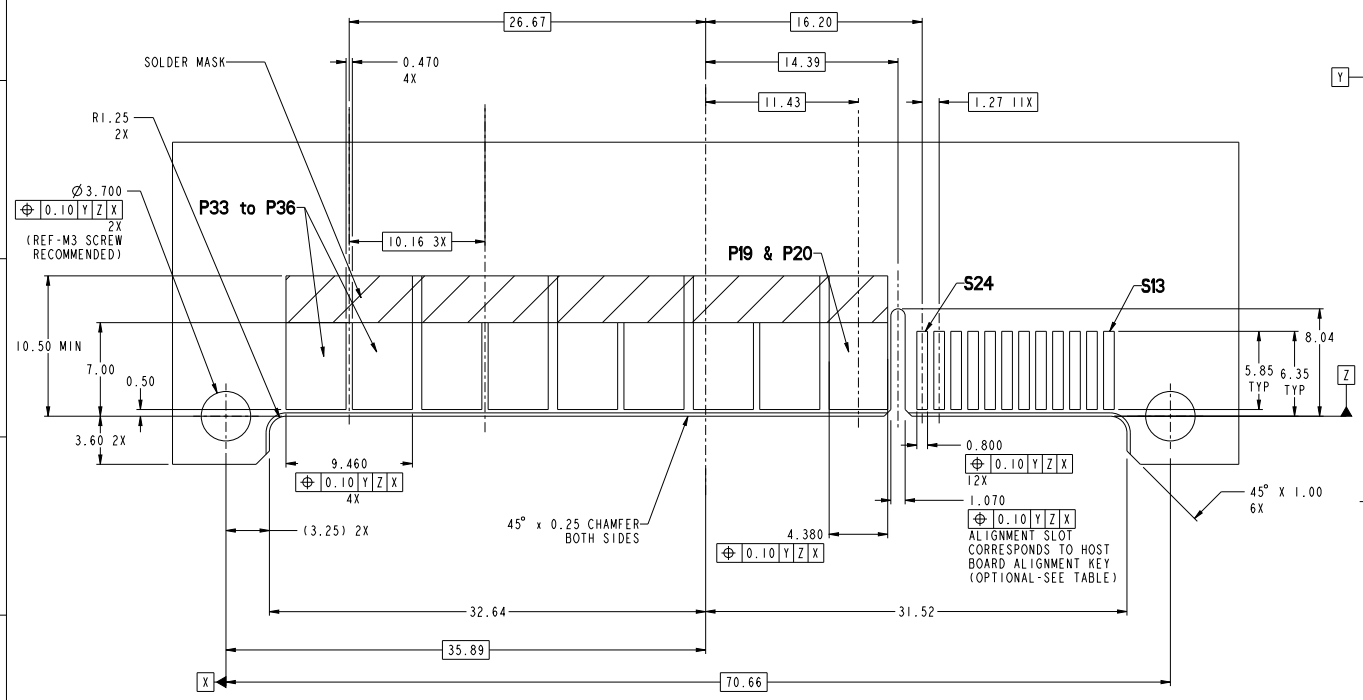


## HOST BOARD LAYOUT AS VIEWED

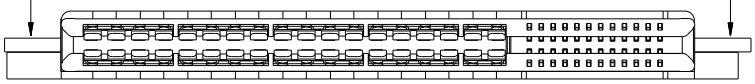

SCALE 7:2

| | | | | | |
|---|---|---|---|---|---|
| dr | Tim Houtz | 2008/10/21 | projection | MM | size A2 / scale 4:1 |
| eng | Wei-Long Zhang | 2012/09/05 | | | ecn no |
| chr | - | - | | | |
| appr | Pei-Ming Zheng | 2012/09/11 | product family | CARD EDGE | rel level Released |
| FCI | title | HPCE-STRADDLE MT (36P-24S) (RECEPTACLE) SPECIAL CASE | dwg no | 10107844 | rev G |
| www.fci.com | cat. no. | - | Product - Customer Drw | | sheet 2 of 6 |

Copyright FCI.

## OLD RECOMENDED HOST BOARD LAYOUT

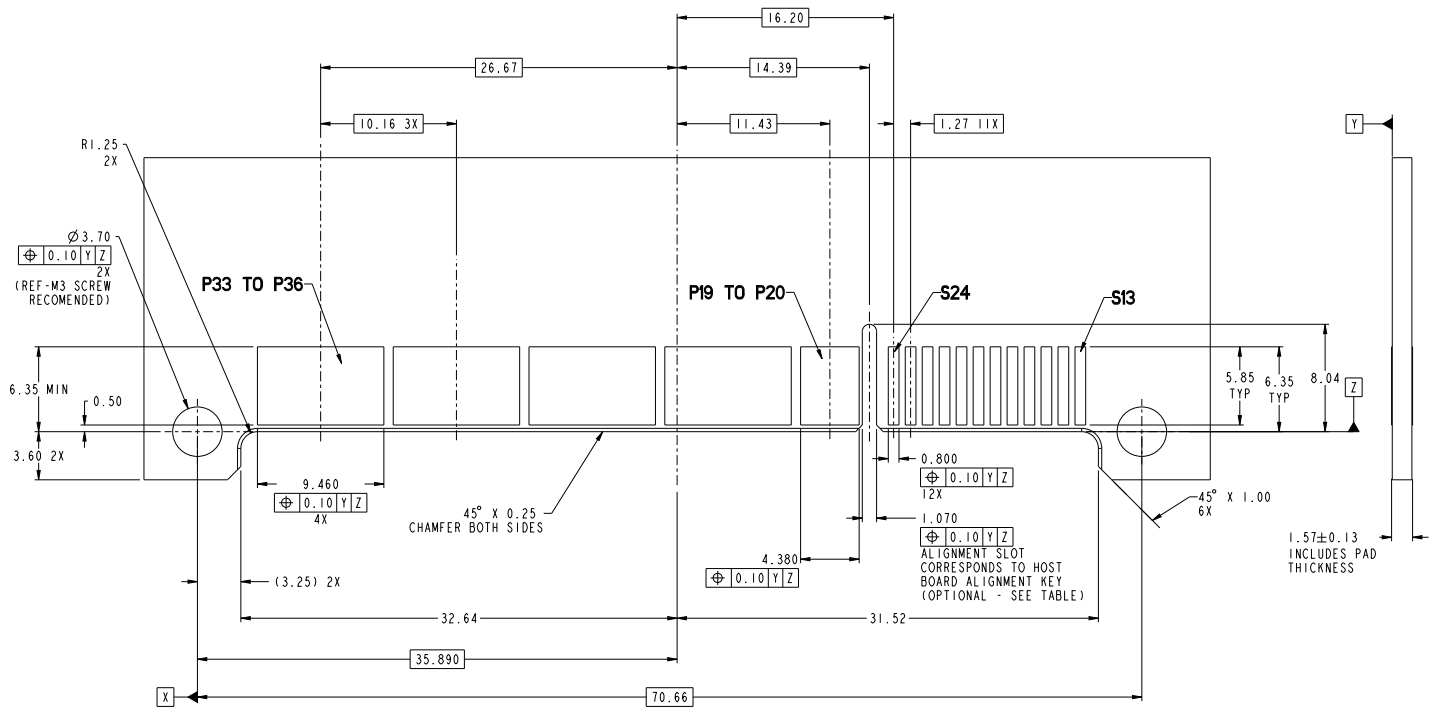


| | | | | | |
|---|---|---|---|---|---|
| dr | Tim-Houtz | 2008/10/21 | projection | MM | size A2 / scale 4:1 |
| eng | Wei-Long Zhang | 2012/09/05 | | | ecn no SLS-001-012701-1 |
| chr | - | - | | | |
| appr | Pei-Ming Zheng | 2012/09/11 | product family | CARD EDGE | rel level Released |
| FCI | title | HPCE-STRADDLE MT (36P-24S) (RECEPTACLE) SPECIAL CASE | dwg no | 10107844 | rev G |
| www.fci.com | cat. no. | - | Product - Customer Drw | | sheet 3 of 6 |

Copyright FCI.

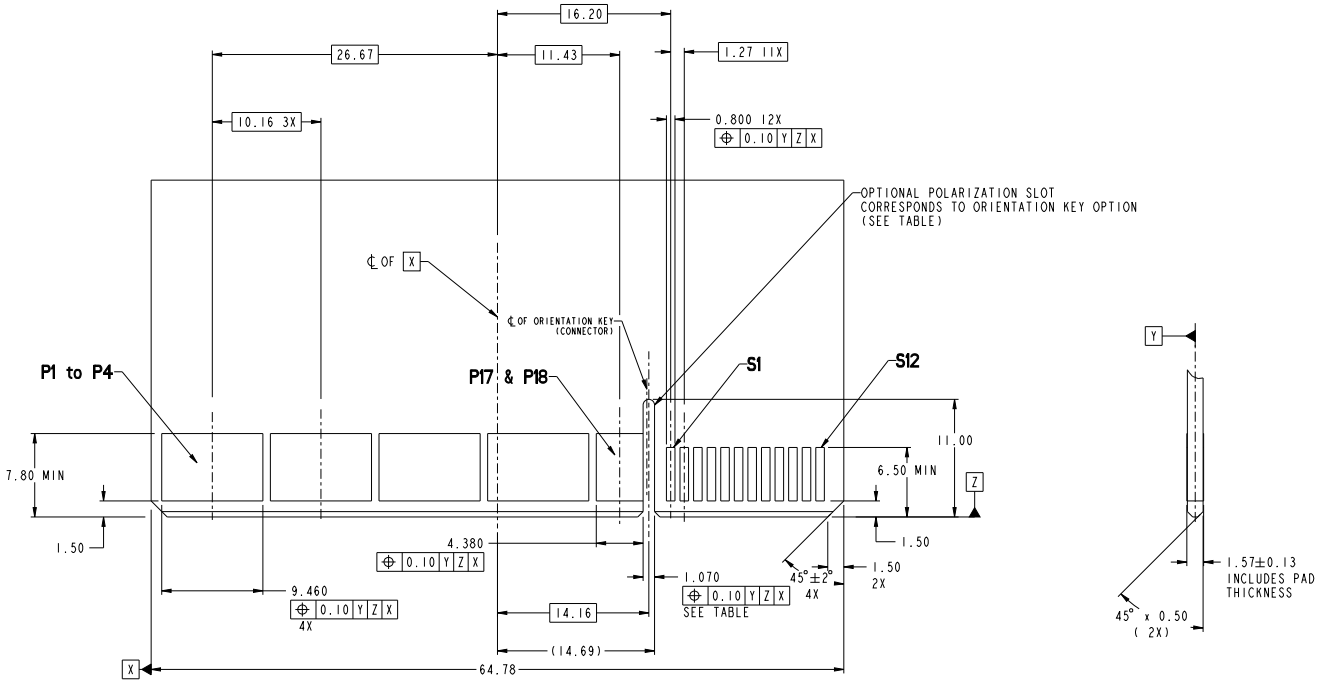


RECOMMENDED MATING BOARD
FOOTPRINT - OPTION 1

| | | | | | |
|---|---|---|---|---|---|
| dr | Tim Houtz | 2008/10/21 | projection | MM | size A2 / scale 4:1 |
| eng | Wei-Long Zhang | 2012/09/05 | | | ecn no |
| chr | - | - | | | |
| appr | Pei-Ming Zheng | 2012/09/11 | product family | CARD EDGE | rel level Released |
| title | HPCE-STRADDLE MT (36P-24S) (RECEPTACLE) SPECIAL CASE | | dwg no | 10107844 | rev G |
| www.fci.com | cat. no. - | | Product - Customer Drw | | sheet 4 of 6 |

Copyright FCI.

Distributor of FCI: Excellent Integrated System Limited
Datasheet of 10107844-001LF - CONN EDGE DUAL FMALE 60POS GXT
Contact us: sales@integrated-circuit.com Website: www.integrated-circuit.com

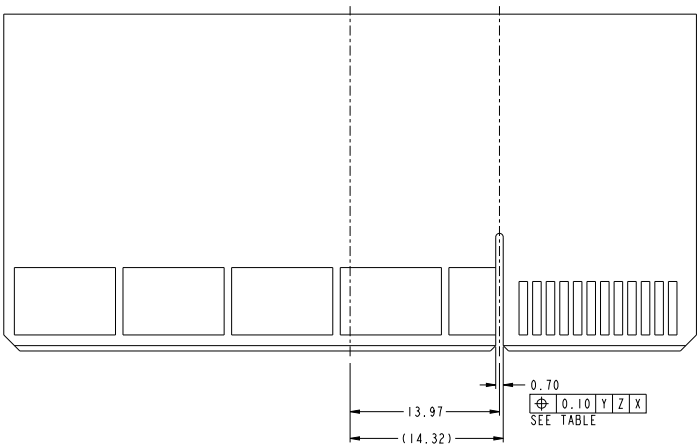


RECOMMENDED MATING BOARD
△G FOOTPRINT - OPTION 2

(ALL DIMENSIONS ARE SAME AS PAGE 4 EXCEPT ABOVE)

Copyright FCI.

| | | | | | |
|---|---|---|---|---|---|
| dr | Tim-Houtz | 2008/10/21 | projection | MM | size A2 / scale 4:1 |
| eng | Wei-Long Zhang | 2012/09/05 | | | ecn no SLX-001-012701-1 |
| chr | - | - | | | |
| appr | Pei-Ming Zheng | 2012/09/11 | product family - | | rel level Released |

FCI www.fci.com — title: HPCE-STRADDLE MT (36P-24S) (RECEPTACLE) SPECIAL CASE — dwg no 10107844 — rev G
cat. no. - — Product - Customer Drw — sheet 5 of 6

Distributor of FCI: Excellent Integrated System Limited
Datasheet of 10107844-001LF - CONN EDGE DUAL FMALE 60POS GXT
Contact us: sales@integrated-circuit.com Website: www.integrated-circuit.com

| PART NUMBER | FEATURE C HOST BOARD ALIGNMENT KEY (SEE NOTE 8) | FEATURE A MOUNTING EARS | FEATURE B FRONT POLARIZATION KEY |
|---|---|---|---|
| 10107844-001LF | NO | YES | YES |
| 10107844-002LF | NO | | NO |
| 10107844-003LF | YES | | NO |
| 10107844-004LF | YES | | YES |

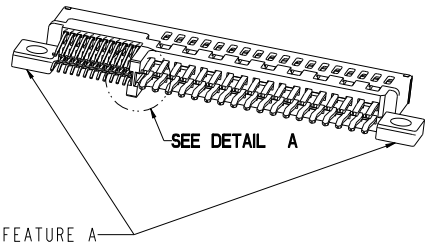


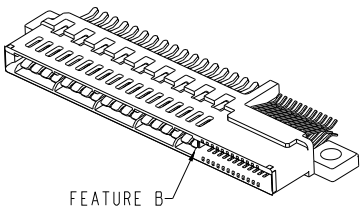


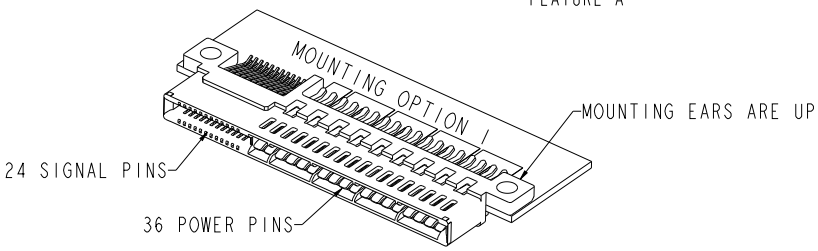


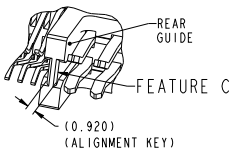


**DETAIL A**
**SCALE 4:1**

NOTES:

1. CONNECTOR MATERIALS:

   HOUSING: HIGH TEMPERATURE THERMAL PLASTIC, BLACK
   UL 94V-0 COMPLIANT
   CONTACTS: HIGH PERFORMANCE COPPER ALLOY.

2. CONTACT FINISH REF. GS-12-604 SECTION 5.2.
3. PRODUCT SPECIFICATION: GS-12-604.
4. APPLICATION SPECIFICATION: GS-20-128.
5. PRODUCT MARKING (FCI - PART NUMBER & DATE CODE) ON HOUSING IN AREA SHOWN.
6. PACKAGING MEETS FCI SPECIFICATION GS-14-937.
7. HOUSING COMPONENT WILL WITHSTAND EXPOSURE TO 260°C PEAK TEMPERATURE FOR 60 SECONDS IN A CONVECTION, INFRA-RED, OR VAPOR PHASE REFLOW OVEN.
8. HOST BOARD ALIGNMENT KEY IS RECOMMENDED TO ENSURE PROPER ALIGNMENT OF SOLDER TAILS WITH HOST BOARD PADS.
9. THE OLD RECOMENDED BOARD IS ASSOCIATED WITH -001 & -002 PARTS. THE NEW HOST BOARD CAN BE USED WITH ALL DASH NUMBERS AND IS FOR IMPROVED SOLDER REFLOW PROCESS.
10. A △G SYMBOL WILL BE NEXT TO ANY DIMENSION, VIEW, OR NOTE WHICH HAS BEEN MODIFIED WITH THE CURRENT DRAWING REVISION.

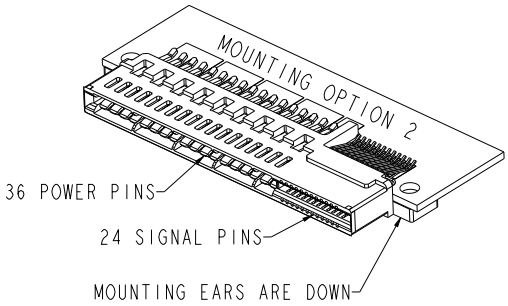


| | | | | | |
|---|---|---|---|---|---|
| dr | Tim Houtz | 2008/10/21 | projection | MM | size A2 / scale 4:1 |
| eng | Wei-Long Zhang | 2012/09/05 | | | ecn no GLS-00-012701-1 |
| chr | - | - | | | |
| appr | Pei-Ming Zheng | 2012/09/11 | product family | CARD EDGE | rel level Released |

FCI — title: HPCE-STRADDLE MT (36P-24S) (RECEPTACLE) SPECIAL CASE — dwg no 10107844 — rev G
www.fci.com — cat. no. - — Product - Customer Drw — sheet 6 of 6

Copyright FCI.