Excellent Integrated System Limited

Stocking Distributor

Click to view price, real time Inventory, Delivery & Lifecycle Information:

FCI
86092645815765ELF

For any questions, you can email us directly:
sales@integrated-circuit.com

Distributor of FCI: Excellent Integrated System Limited
Datasheet of 8609264581576 5ELF - DIN STRAIGHT HEADER F
Contact us: sales@integrated-circuit.com Website: www.integrated-circuit.com

DIMENSIONS

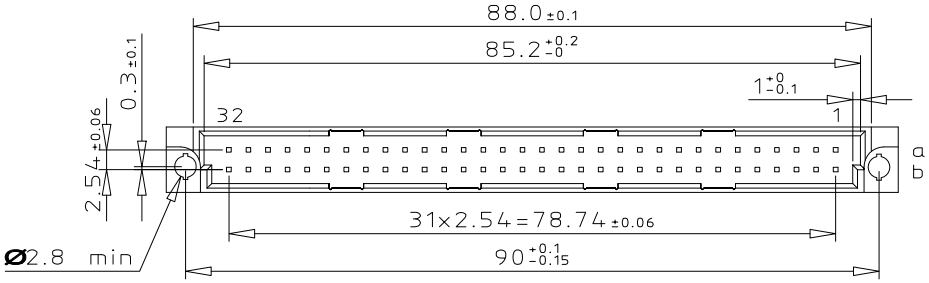

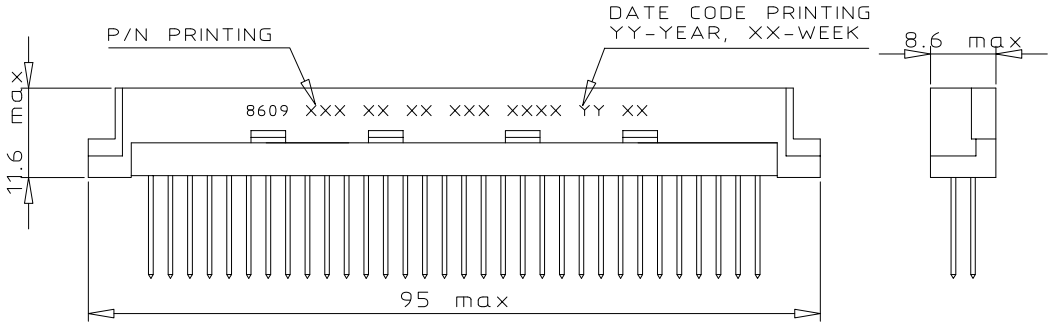

TERMINATION

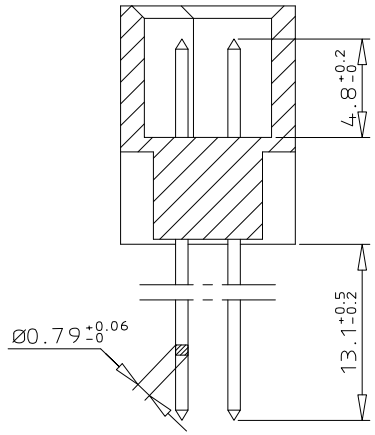

ORDERING INFORMATION

SERIES	8609	2	64	5	8	15	7	4	5	ELF
ROWS FITTED WITH CONTACTS										
ROW a b -		2	64							
ROW a - -		1	32							
NO. OF CONTACTS				5						
TYPE OF INSULATOR										
2 ROW MALE INSULATOR					5					
METHOD OF MOUNTING										
REVERSE MOUNTING - STYLE Q						8				
TERMINATION										
WIRE WRAP						15				
OPTIONS										
NO OPTION							7			
PERFORMANCE CLASS										
DIN 41612 CLASS 3								4		
DIN 41612 CLASS 2								5		
DIN 41612 CLASS 1								6		
AS PER MIL C 55302 / JSS 50808								8		
PITCH PER ROW										
2.54 mm									5	
LEAD FREE VERSION										ELF

PCB LAYOUT

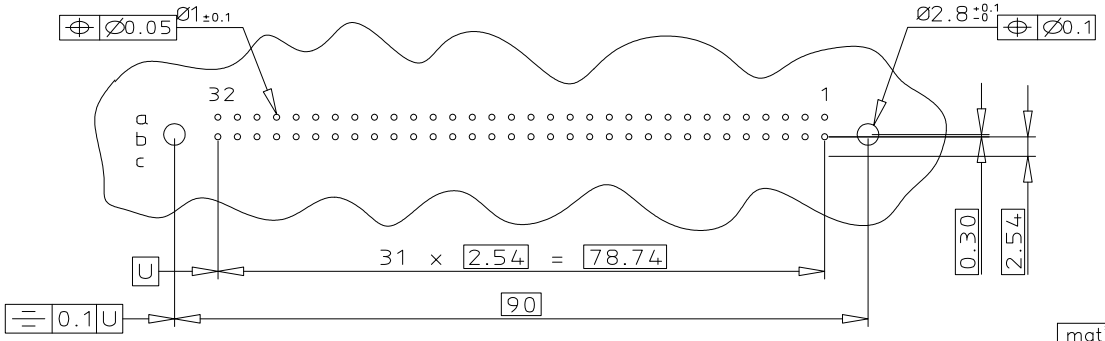

GENERAL CHARACTERISTICS & RoHS INFO

REFER DRAWING C-8609-0000A

mat'l. code				surface	tolerance	projection	product family
SEE DWG C-8609-0000A				ISO 1302	ISO 406 ISO 1101		8609
ltr	ecn no	dr	date	tolerances unless otherwise specified			title
A	108-0101	JS	2008-08-18	angles	linear	mm	DIN REVERSE HEADER
B	108-0146	KR	2008-10-21		0.X ±0.1		WIRE WRAP DIN 41612 STYLE Q
				0°±2°	0.XX ±0.1		
					0.XXX ±0.1	scale 3:2	
				dr JOHN SLEEBA	2008-08-18		dwg no C-8609-2147
				engr JOHN SLEEBA	2008-08-18		sheet 1 of 1
				chr KESAVAN R	2008-10-21		size A3
				appd KESAVAN R	2008-10-21		type Product Customer Drawing
sheet index	revision	B					
	sheet	1					

Copyright FCI
FCIconnect.com
electronic components

form: A3