Excellent Integrated System Limited

Stocking Distributor

Click to view price, real time Inventory, Delivery & Lifecycle Information:

Artesyn Embedded Technologies
EXB50-48D05-3V3

For any questions, you can email us directly:
sales@integrated-circuit.com

EXB50 Dual Series

Dual positive output

ARTESYN TECHNOLOGIES

- **Two independently regulated positive outputs**
- **Each output offers ultra-wide output voltage trim range (0.8V to 3.6V for EXB50-48D3V3-1V8, 1.5V to 5.25V for EXB50-48D05-3V3)**
- **High efficiency topology, 89% typical**
- **Approved to IEC60950, UL/cUL1950**
- **Operating ambient temperature of -40°C to +70°C (natural convection)**
- **No minimum load on either output**
- **Complies with ETS 300 019-1-3/2-3 and ETS 300 386-1**

The EXB50 Dual is a 50W independently regulated dual output DC/DC converter specifically designed to meet the power needs of low voltage silicon. Housed in an open frame package with an industry standard $^1/_2$ brick footprint, the EXB50 Dual can deliver up to 8.5A from either output, and up to 11A in total, at temperatures of up to 70ºC under natural convection. With some forced air and/or reduced ambient temperatures, the EXB50 can deliver up to 8.5A from either output, and up to 17A in total. The converter is primarily intended for the networking, telecoms and wireless markets, where small size, lower output voltages with higher currents, low profile and high efficiency are all key demands. Product features include wide output trim and remote on/off. Overvoltage, short circuit and over-temperature protection combines to make the EXB50 Dual a very robust and flexible product.

CE (LVD) c UL TÜV

2 YEAR WARRANTY

All specifications are typical at Vin = 48V, Io1 = 5A, Io2 = 5A, Tamb = 25°C unless otherwise stated

SPECIFICATIONS

OUTPUT SPECIFICATIONS

Voltage adjustability	EXB50-48D3V3-1V8 EXB50-48D05-3V3	0.8V to 3.6V 1.5V to 5.25V
Voltage accuracy	Both outputs	±0.5% max.
Line regulation	Low line to high line Low line to high line	Vout1 ±0.5% Vout2 ±0.5%
Load regulation	Full load to no load	±0.5%
Minimum load	Both outputs	0%
Ripple and noise 20MHz bandwidth	Both outputs	150mV pk-pk max. 30mV rms max.
Transient response peak dev. settling time	3A to 5A (1A/10µs) and back	150mV 400µs
Short circuit protection	EXB50-48D3V3-1V8 EXB50-48D05-3V3	17A rms 15A rms

INPUT SPECIFICATIONS

Input voltage range	48Vin nominal	36 to 75VDC
Input current	No load Remote OFF	100mA max. 4mA max.
UVLO turn ON voltage UVLO turn OFF voltage	All inputs All inputs	34V typ. 33V typ.
Active high remote ON/OFF Logic compatibility ON OFF (See Note 7)		 Open collector ref. to -input Open circuit voltage or >3.2VDC <0.4VDC
Active low remote ON/OFF Logic compatibility ON OFF (See Note 7)		 Open collector ref. to -input 0.4VDC max. Open circuit voltage or >3.2VDC

EMC CHARACTERISTICS

ETS 300 386-1 table 5		
Conducted emissions (See Note 3)	EN55022 with external filter EN55022 with external filter	Level A Level B
Radiated emissions	EN55022	Level A
Immunity:		
ESD air	EN61000-4-2	8kV (NP), 15kV (RP)
ESD contact	EN61000-4-2	6kV (NP), 8kV (RP)
EFT DC power	EN61000-4-4	2kV (NP), 4kV (LFS)
EFT signal	EN61000-4-4	1kV (NP), 2kV (LFS)
Radiated field enclosure	EN61000-4-3	10V/m (NP)
Surges indoor signal	EN61000-4-5	500V (RP)
Conducted (DC power)	EN61000-4-6	10V (NP)
Conducted (signal)	EN61000-4-6	10V (NP)
Input transients	ETS 300 132-2, ETR 283	

GENERAL SPECIFICATIONS

Efficiency		89% typ.
Basic insulation	Input/output	1500VDC
Input fuse 48V	(See Note 2)	4A slow blow HRC
Switching frequency (fixed)	EXB50-48D3V3-1V8 EXB50-48D05-3V3	250kHz 300kHz
Approvals and standards		IEC60950 UL/cUL1950
Material Flammability		UL94V-0
Weight		42g (1.48oz)
MTBF	MIL-HDBK-217	177,362 hours

ENVIRONMENTAL SPECIFICATIONS

Thermal performance (See Notes 4 and 5)	Operating ambient temperature Non-operating	-40°C to +100°C, see curves -40°C to +120°C
ETS 300 019-2-3		Classes T3.1 to T3.5
Air temperature	Low: IEC 68-2-1 High: IEC 68-2-2 Change: IEC 68-2-14	-40°C +70°C -40°C to +70°C
Relative humidity	IEC 68-2-56 IEC 68-2-30	10% to 100% RH Condensation

EXB50 Dual Series

Dual positive output

ARTESYN TECHNOLOGIES

For the most current data and application support visit www.artesyn.com/powergroup/products.htm

INPUT VOLTAGE	OUTPUT VOLTAGE 1	OUTPUT VOLTAGE 2	OUTPUT CURRENT (8) 1	OUTPUT CURRENT (8) 2	OVP (1) 1	OVP (1) 2	TYPICAL EFFICIENCY	MODEL NUMBER (7)
36-75VDC	3.3V	1.8V	8.5A	8.5A	4.12V	2.34V	86.4%	EXB50-48D3V3-1V8
36-75VDC	5V	3.3V	7.5A	7.5A	6.25V	4.12V	89%	EXB50-48D05-3V3

Notes

1. Latching OVP response time is 2ms (typ.). OVP latch is reset by toggling the control input, or by cycling the input voltage.
2. User must provide recommended fuses in order to comply with safety approvals.
3. Meets both level A and level B conducted emissions only with external components connected before the input pins to the converter.
4. Maximum temperature on hotspots not to exceed 110ºC. See Application Note 127 on Artesyn Technologies website www.artesyn.com.
5. See the long form data sheet for derating curves.
6. For stable operation connect an external output capacitor of at least 100µF to each output. Recommended capacity AVX TPS series (e.g. TPSD107*010#0100) or equivalents.
7. Active low remote ON/OFF, is available. Standard product is active high. Designate with the suffix '-R' e.g. EXB50-48D05-3V3-R.
8. Maximum total current from the module is 15A for EXB50-48D05-3V3 and 17A for EXB50-48D3V3-1V8 with airflow.

PROTECTION

Short circuit protection	Continuous
Overvoltage protection	Latching
Thermal protection	125°C with automatic recovery

TELECOM SPECIFICATION

Central office interface A	ETS300-132-2 input voltage and current requirements

CAUTION: Hazardous internal voltages and high temperatures. Ensure that unit is not user accessible.

PIN CONNECTIONS

PIN NUMBER	FUNCTION
1	- Vin
2	No Pin
3	Remote ON/OFF
4	+ Vin
5	Vo1 Trim
6	Vo1 Return
7	Vo1+
8	Vo2 Trim
9	Vo2 Return
10	Vo2+

EXTERNAL OUTPUT TRIMMING

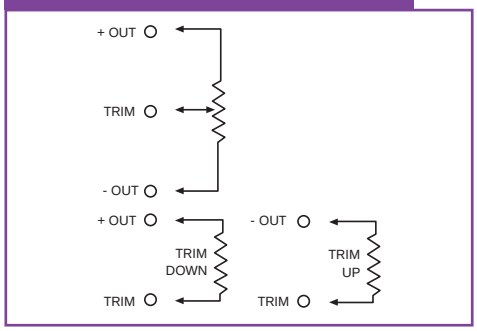

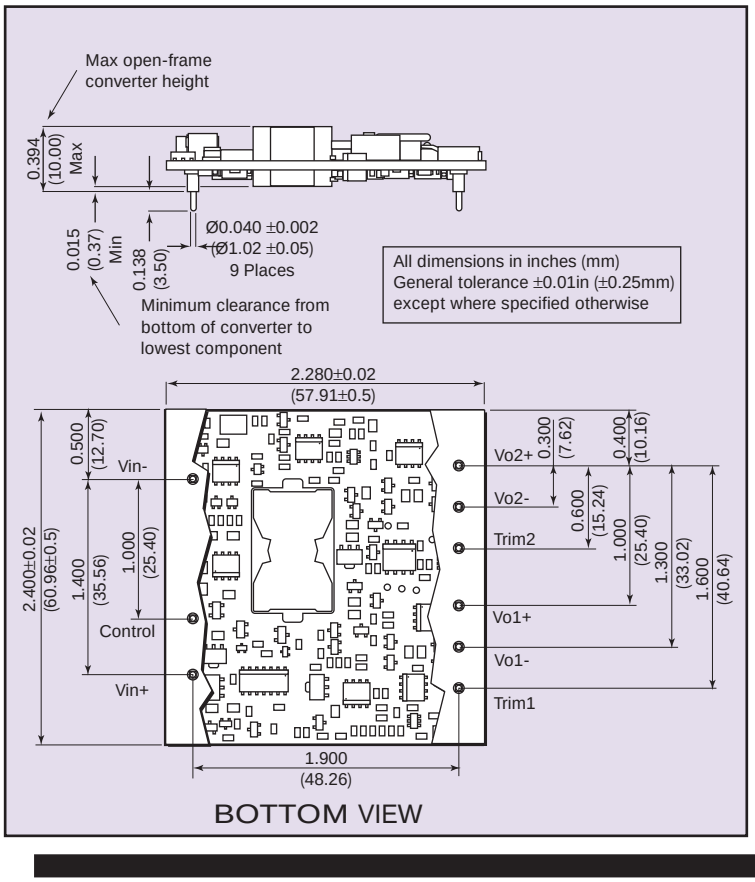

Data Sheet © Artesyn Technologies® 2002
The information and specifications contained in this data sheet are believed to be correct at time of publication. However, Artesyn Technologies accepts no responsibility for consequences arising from printing errors or inaccuracies. Specifications are subject to change without notice. No rights under any patent accompany the sale of any such product(s) or information contained herein.