Excellent Integrated System Limited

Stocking Distributor

Click to view price, real time Inventory, Delivery & Lifecycle Information:

E-Switch
PV7F2Y0SS-333

For any questions, you can email us directly:
sales@integrated-circuit.com

SHEET 1 OF 1

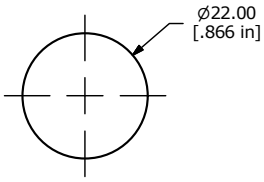

PANEL CUTOUT
MAX. PANEL THICKNESS 8mm

SWITCH FUNCTION ▲	
POS. 1	POS. 2 (MOM)
1-2	3-4

(ON) = MOMENTARY

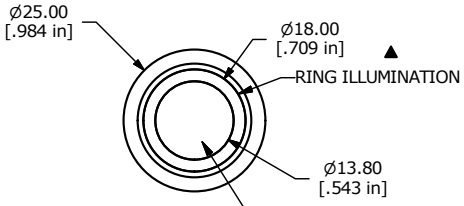

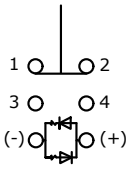

▲ SPDT
CONTACT CONFIGURATION

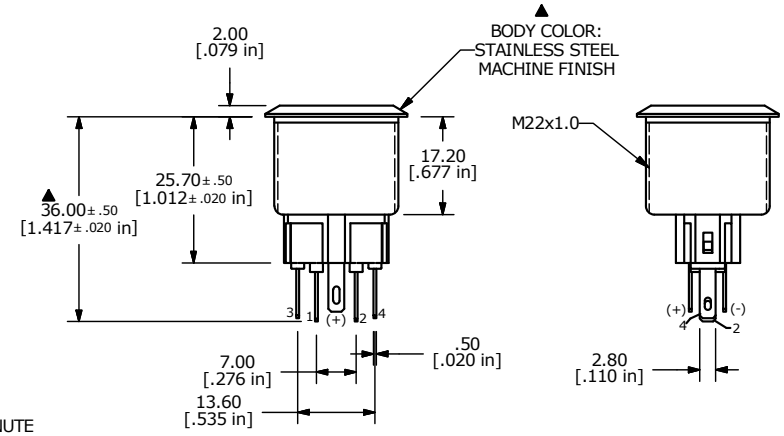

NOTE:
1. ALL DIMENSIONS IN mm [INCH]
2. GENERAL TOLERANCE: X.X = ± 0.4
   X.XX = ± 0.25
3. TERMINAL NOS. FOR REF. ONLY
▲ 4. FUNCTION: SPDT
▲ 5. RATING: 2A @ 48VDC
6. ILLUMINATION VOLTAGE: 6V
7. CONTACT RESISTANCE: 50mΩ MAX. @ 1A 12VDC
8. INSULATION RESISTANCE: 1,000MΩ @ 500VDC
9. DIELECTRIC STRENGTH: 2,000VAC MIN. FOR 1 MINUTE
10. ELECTRICAL LIFE: 50,000 CYCLES
11. OPERATING TEMPERATURE: -25°C TO 70°C
12. INGRESS PROTECTION: IP65
13. ▲DENOTES CRITICAL PARAMETER
13. 2002/95/EC (ROHS) COMPLIANT
▲14. ILLUMINATION COLOR: GREEN (FORWARD), GREEN (REVERSE)
15. HARDWARE INCLUDED (NOT SHOWN) HEX NUT AND O-RING

REV	PCR NO	DESCRIPTION	DATE	BY
B	20632	Chd OT -25°C TO 70°C was -40°C TO 70°C	06/07/12	drg
A	20630	INITIAL RELEASE	06/06/12	drg

THE INFORMATION CONTAINED IN THIS DOCUMENT IS PROPRIETARY TO E-SWITCH AND IS NOT TO BE COPIED OR TRANSFERRED

E•SWITCH®

TITLE	PV7F2Y0SS-333			
SCALE NONE	DATE 6/7/2012	DR drg	DWG 52-PV7F2Y0SS333	REV B