Excellent Integrated System Limited

Stocking Distributor

Click to view price, real time Inventory, Delivery & Lifecycle Information:

E-Switch
PV3WF2B011G-341

For any questions, you can email us directly:
sales@integrated-circuit.com

SHEET 1 OF 1

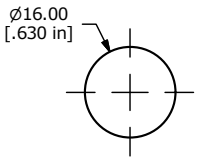

PANEL CUTOUT
MAX. PANEL THICKNESS
14.0mm [.551]

▲

SWITCH FUNCTION	
POS. 1	POS. 2
ON	(ON)
1-3	1-2

(ON) = MOMENTARY

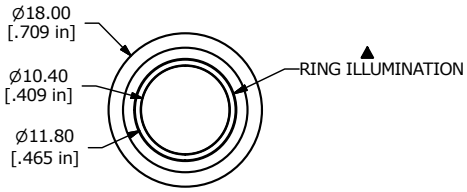

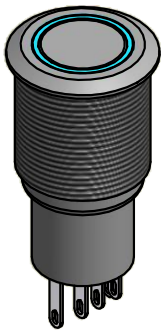

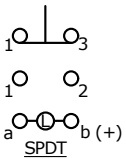

SPDT
CONTACT CONFIGURATION

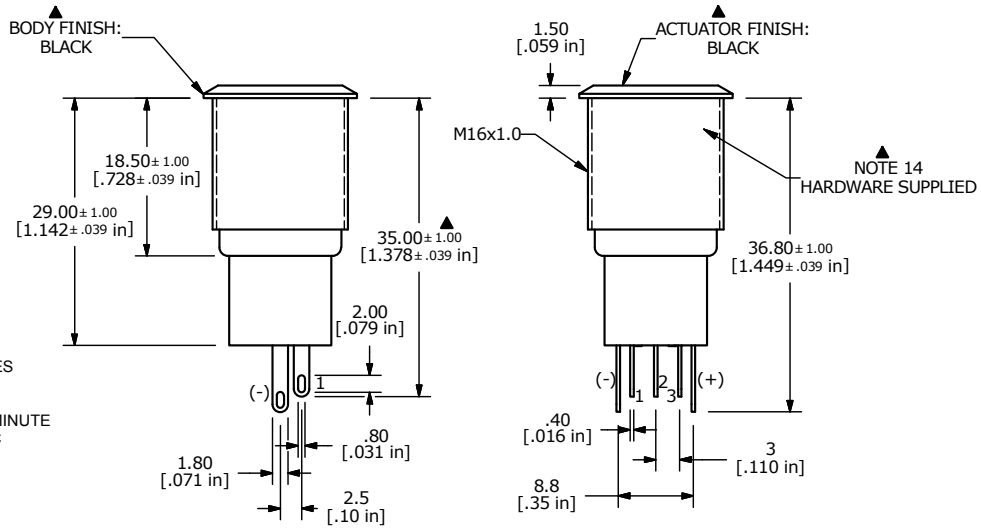

NOTE:
1. ALL DIMENSIONS IN MM [INCH]
2. GENERAL TOLERANCE: X.X=±0.4
   X.XX=±0.25
3. TERMINAL NUMBERS FOR REF ONLY
▲4. CONTACT MATERIAL: GOLD
5. RATING: 2A 48VDC
6. ELECTRIC LIFE: 50,000 MAKE-AND-BREAK CYCLES AT FULL LOAD.
7. INSULATION RESISTANCE: 1,000 MΩ MIN.
8. DIELECTRIC STRENGTH: 2,000 VAC MIN. FOR 1 MINUTE
9. CONTACT RESISTANCE: 50mΩ MAX. @ 1A 12VDC
10. OPERATING TEMP.: -20°C to 55°C
11. ▲DENOTES CRITICAL PARAMETER.
▲12. LAMP VOLTAGE: 20mA 2.8V
▲13. ILLUMINATION COLOR: BLUE
14. HARDWARE SUPPLIED: O-RING AND HEXNUT
▲15. INGRESS RATING: IP67 TO FRONT PANEL
16. 2002/95/EC (ROHS) COMPLIANT

REV	PCR NO	DESCRIPTION	DATE	BY
A	21804	INITIAL RELEASE	3/11/15	MW

THE INFORMATION CONTAINED IN THIS DOCUMENT IS PROPRIETARY TO E-SWITCH AND IS NOT TO BE COPIED OR TRANSFERRED

E•SWITCH®

TITLE PV3WF2B011G-341

SCALE	DATE	DR	DWG	REV
2:1	3/11/2015	MW	52-PV3WF2B011G341	A