Excellent Integrated System Limited

Stocking Distributor

Click to view price, real time Inventory, Delivery & Lifecycle Information:

Littelfuse
02800046Z

For any questions, you can email us directly:
sales@integrated-circuit.com

Distributor of Littelfuse : Excellent Integrated System Limited
Datasheet of 02800046Z - FUSE HOLDER PANEL MOUNT
Contact us: sales@integrated-circuit.com Website: www.integrated-circuit.com

LTR	DATE	REVISION	CHK	APD
E	10/28/02	82332C- REVISE & REDRAWN ON NEW FORMAT JMB		

Finish: type 2 clear Sulphuric acid

class 1, per Mil-A-8625

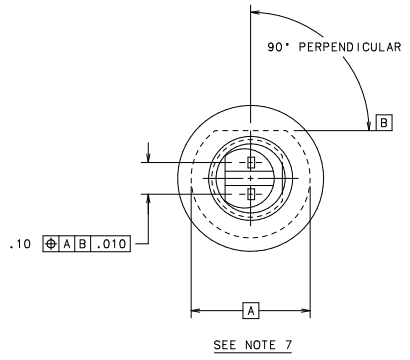

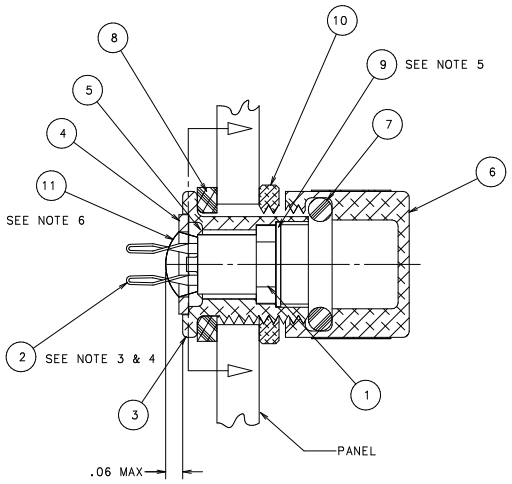

BACK PANEL MOUNTING

NO	COMPONENT NO	DESCRIPTION	QTY/M	U/M
--	914-020	LABEL	6.700	EAD
--	580509	CARTON	6.700	EAD
--	580278	PARTITION	20.100	EAD
--	580219	FOAM	6.700	EAD
11	087155	EPOXY RESIN & HARDENER	.132	QT
10	280046-3	NUT	1000	EA
9	901-251	ORIENTATION DISC	1000	EA
8	901-132	HOUSING "O" RING	1000	EA
7	901-131	KNOB "O" RING	1000	EA
6	280046-2	KNOB	1000	EA
5	087232	ADHESIVE	.27	LB
4	901-270	WASHER	1000	EA
3	280046-1	HOUSING	1000	EA
2	282001-4	TERMINAL, CLIP	2000	EA
1	282006-3	BODY	1000	EA

BILL OF MATERIAL

NOTE:

1. FINAL ASSEMBLY MUST BE CAPABLE OF ACCEPTING A L.F. MICROFUSE.
2. WHEN INSPECTED AS A FINAL ASSEMBLY ALL NOTES AND CRITICAL DIM'S FROM PIECE PART AND SUB-ASS'Y DRAWINGS APPLY.
3. TWIST TERMINALS 90° AT BASE BEFORE SPREADING.
4. MAINTAIN EACH OPENING TO ACCEPT (2) #22 GA (.025 DIA) WIRES.
5. ADD SMALL AMOUNT OF ADHESIVE 087232 AROUND DISC PERIMETER AFTER ASSEMBLY (REF. STD. #095088)
6. BUBBLES OR VOIDS IN EPOXY TO BE MINIMIZED AND SHALL NOT COMPLETELY PENETRATE EPOXY BUILD-UP OR EXCEED 1/16" DIAMETER. (REF. STD. 095095)
7. TERMINALS TO BE ALIGNED PERPENDICULAR TO FLAT ON ALUMINUM HOUSING.
8. MARK (RUBBER STAMP) THE INITIAL PACKING CONTAINER WITH L/F PART No., QUANTITY, PURCHASE ORDER No. AND LOT DATE CODE.
9. PRESERVATION AND PACKING PER MIL-F-19207 LEVEL "A" OR "C" AS DIRECTED BY PURCHING ORDER.
10. EACH LOT MUST BE ACCONPANIED BY A CERTIFICATE OF COMPLIANCE.

PACKAGING NOTES:

PACK 150 FUSE POSTS PER CARTON (SEE CHART)
- CUT FOAM 580219 INTO (6) PIECES APPROX. 4 x 8 PLACE 2 PIECES IN BOTTOM OF CARTON AND INSERT PARTITION ASSEMBLY 580278.
- PLACE ONE FUSE POSTS IN EACH CELL (50 TOTAL).
- PLACE FOAM ON TOP OF PARTITION ASSEMBLY.
- REPEAT FOR (2) ADDITIONAL LAYERS, 50 PER LAYER/3 LAYERS = 150 TOTAL.
- LABEL WITH 914-020 LABEL PRINTED AS SHOWN BELOW.

02800046Z
MICROFUSE HLDR
QTY: 150 05/04/00
LITTELFUSE INC.
ASSEMBLED IN MEXICO

T.L. ASHFORD FORMAT "AA"
(LITTELFUSE ONLY)

O	DENOTES CRITICAL CHARACTERISTICS.
CPK	DENOTES CPK DIMENSIONS,-MINIMUM CPK VALUE
ST	DENOTES A CHARACTERISTIC THAT PROVIDES AN INDICATION OF PROCESS PERFORMANCE. PROCEDURE FOR MEASUREMENT AND TRACKING TO BE DEFINED IN LITTELFUSE INSPECTION INSTRUCTIONS.
CP	DENOTES CP DIMENSIONS,-MINIMUM CP VALUE MUST BE WITHIN THE DIMENSIONAL LIMITATIONS SHOWN ON DRAWING AND INITIALLY LOCATED TO ALLOW FOR MAXIMUM TOOL LIFE.

UNLESS OTHERWISE SPECIFIED, DIMENSIONS DO NOT INCLUDE PLATING.

COPIES TO: 1 9 18 / 2 10 19 / 3 12 20 / 4 13 21 / 5 14 23 / 6 15 33 / 7 16 43 / 8 17 53

MATL SPEC
FINISH
DRW JMB DATE 10/28/02 SCALE 4=1
CHK DATE SUPER DR
APPD DATE RAW STK WT LBS/M

TOLERANCE UNLESS OTHERWISE SPECIFIED
TWO PLACE DEC ±.01 FRACTION ±
THREE PLACE DEC ±.005 ANGULAR ±1°

TITLE MICROFUSE FUSE POSTS (BACK PANEL MTG.)

Littelfuse® DES PLAINES, ILLINOIS 60016 | REVISION E | DRAWG. NO. 02800046Z | FINAL

UNCONTROLLED DOCUMENT