Excellent Integrated System Limited

Stocking Distributor

Click to view price, real time Inventory, Delivery & Lifecycle Information:

Littelfuse
SL1056A

For any questions, you can email us directly:
sales@integrated-circuit.com

SL 1053.s.

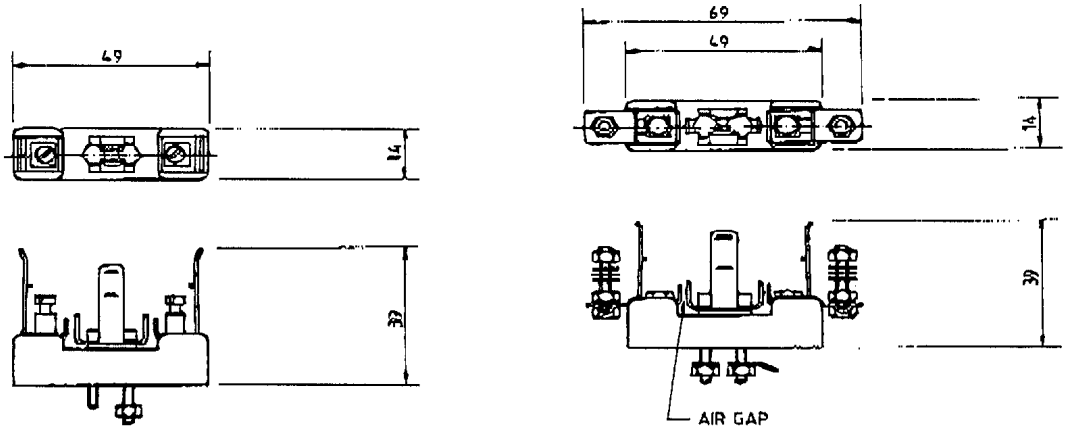

53

SL 1056

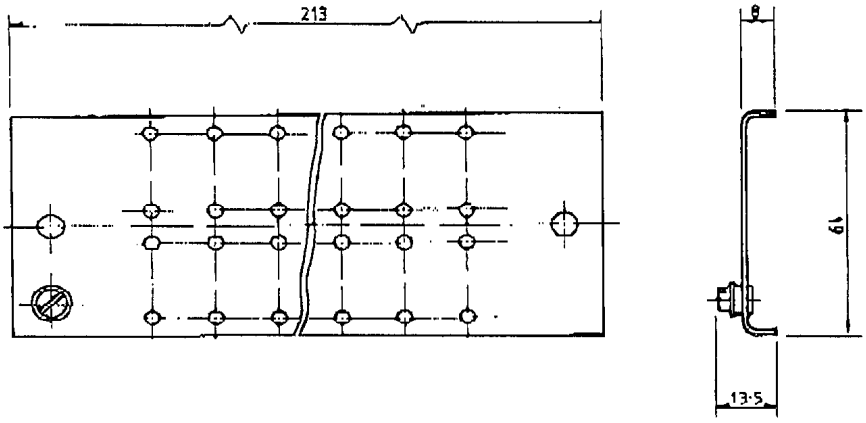

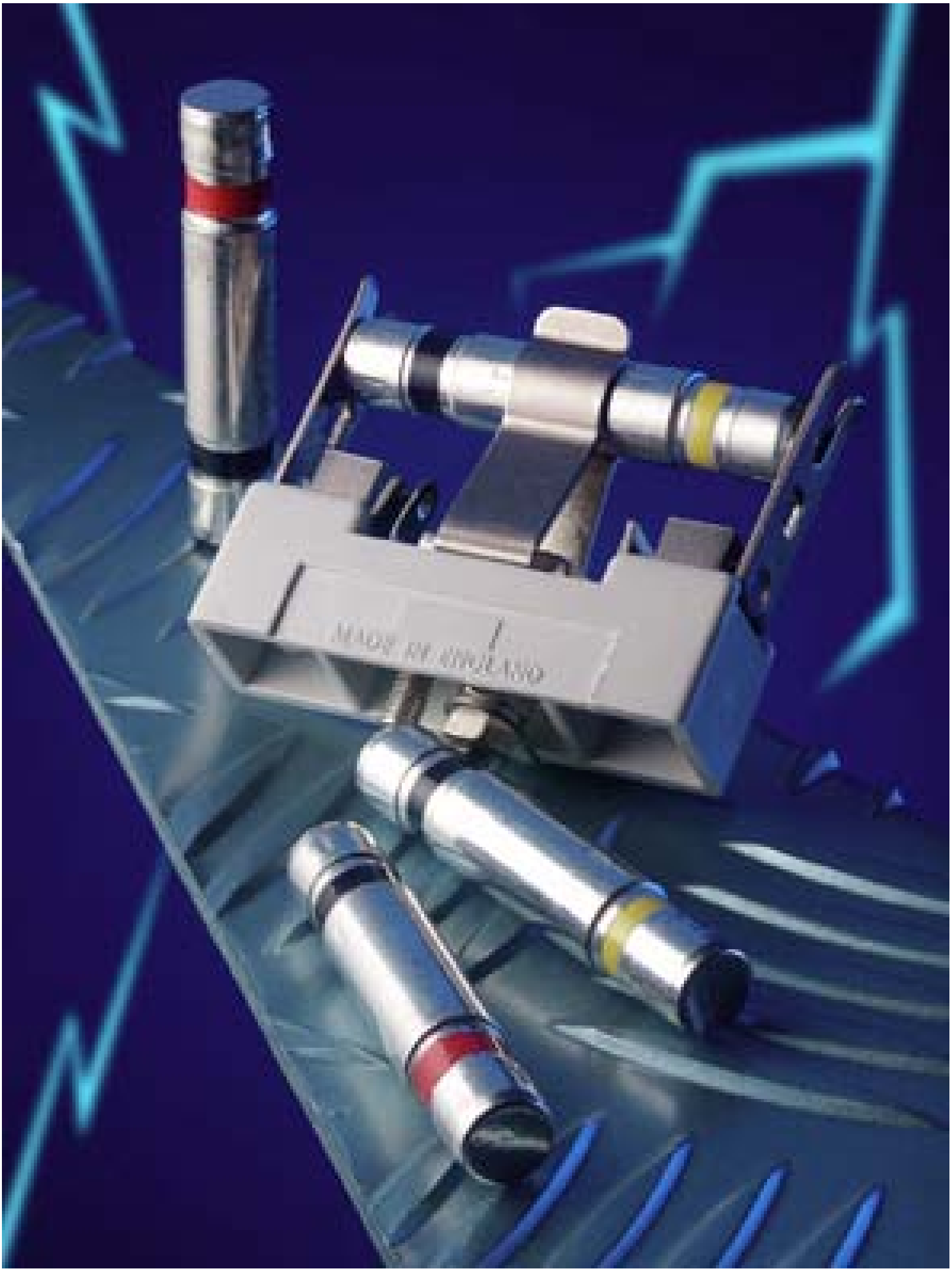
MADE IN ENGLAND