Excellent Integrated System Limited

Stocking Distributor

Click to view price, real time Inventory, Delivery & Lifecycle Information:

STMicroelectronics
74LVC86AMTR

For any questions, you can email us directly:
sales@integrated-circuit.com

Distributor of STMicroelectronics: Excellent Integrated System Limited
Datasheet of 74LVC86AMTR - IC GATE XOR 4CH 2-INP 14-SO
Contact us: sales@integrated-circuit.com Website: www.integrated-circuit.com

74LVC86A

LOW VOLTAGE CMOS QUAD EXCLUSIVE OR GATE HIGH PERFORMANCE

- 5V TOLERANT INPUTS
- HIGH SPEED: t_{PD} = 4.2ns (MAX.) at V_{CC} = 3V
- POWER DOWN PROTECTION ON INPUTS AND OUTPUTS
- SYMMETRICAL OUTPUT IMPEDANCE: $|I_{OH}| = I_{OL}$ = 24mA (MIN) at V_{CC} = 3V
- PCI BUS LEVELS GUARANTEED AT 24 mA
- BALANCED PROPAGATION DELAYS: $t_{PLH} \cong t_{PHL}$
- OPERATING VOLTAGE RANGE: V_{CC}(OPR) = 1.65V to 3.6V (1.2V Data Retention)
- PIN AND FUNCTION COMPATIBLE WITH 74 SERIES 86
- LATCH-UP PERFORMANCE EXCEEDS 500mA (JESD 17)
- ESD PERFORMANCE: HBM > 2000V (MIL STD 883 method 3015); MM > 200V

SOP TSSOP

Table 1: Order Codes

PACKAGE	T & R
SOP	74LVC86AMTR
TSSOP	74LVC86ATTR

DESCRIPTION

The 74LVC86A is a low voltage CMOS QUAD EXCLUSIVE OR GATE fabricated with sub-micron silicon gate and double-layer metal wiring C^2MOS technology. It is ideal for 1.65 to 3.6 V_{CC} operations and low power and low noise applications.

It can be interfaced to 5V signal environment for inputs in mixed 3.3/5V system.

It has more speed performance at 3.3V than 5V AC/ACT family, combined with a lower power consumption.

All inputs and outputs are equipped with protection circuits against static discharge, giving them 2KV ESD immunity and transient excess voltage.

Figure 1: Pin Connection And IEC Logic Symbols

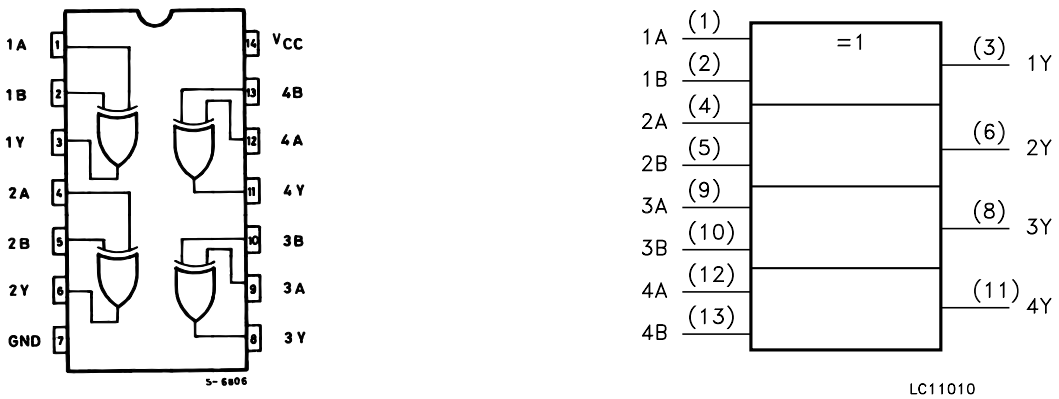

Figure 2: Input And Output Equivalent Circuit

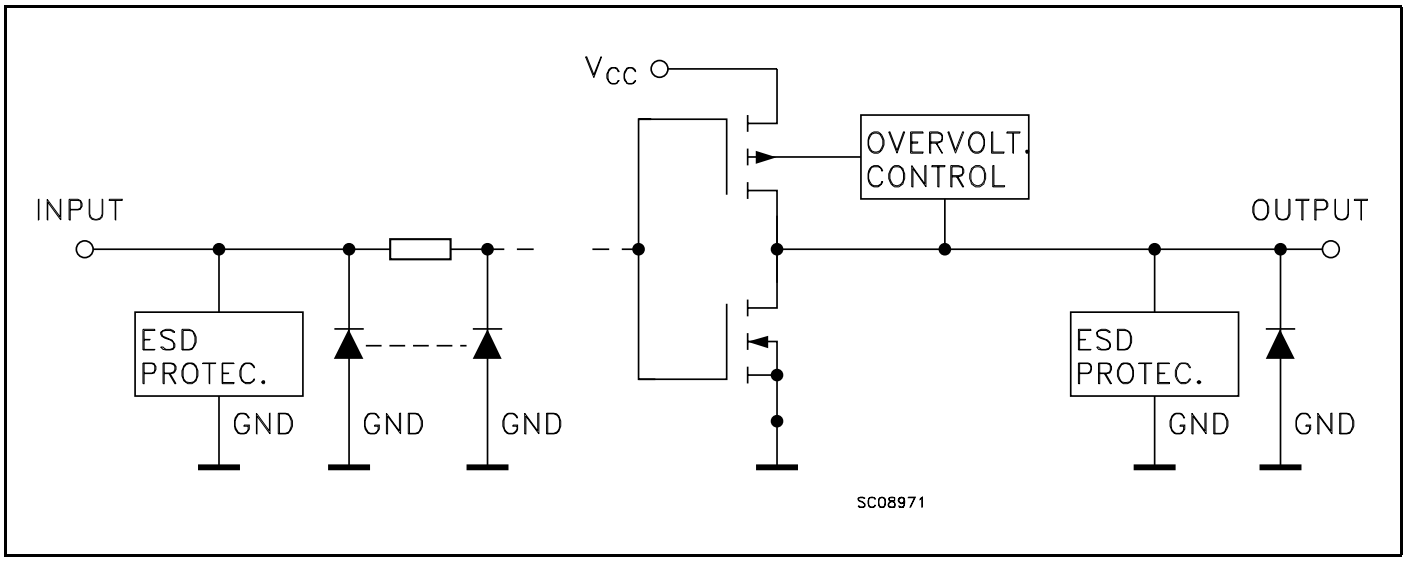

Table 2: Pin Description

PIN N°	SYMBOL	NAME AND FUNCTION
1, 4, 9, 12	1A to 4A	Data Inputs
2, 5, 10, 13	1B to 4B	Data Inputs
3, 6, 8, 11	1Y to 4Y	Data Outputs
7	GND	Ground (0V)
14	V_{CC}	Positive Supply Voltage

Table 3: Truth Table

A	B	Y
L	L	L
L	H	H
H	L	H
H	H	L

Table 4: Absolute Maximum Ratings

Symbol	Parameter	Value	Unit
V_{CC}	Supply Voltage	-0.5 to +7.0	V
V_I	DC Input Voltage	-0.5 to +7.0	V
V_O	DC Output Voltage (V_{CC} = 0V)	-0.5 to +7.0	V
V_O	DC Output Voltage (High or Low State) (note 1)	-0.5 to V_{CC} + 0.5	V
I_{IK}	DC Input Diode Current	- 50	mA
I_{OK}	DC Output Diode Current (note 2)	- 50	mA
I_O	DC Output Current	± 50	mA
I_{CC} or I_{GND}	DC V_{CC} or Ground Current per Supply Pin	± 100	mA
T_{stg}	Storage Temperature	-65 to +150	°C
T_L	Lead Temperature (10 sec)	300	°C

Absolute Maximum Ratings are those values beyond which damage to the device may occur. Functional operation under these conditions is not implied
1) I_O absolute maximum rating must be observed
2) V_O < GND

Table 5: Recommended Operating Conditions

Symbol	Parameter	Value	Unit
V_{CC}	Supply Voltage (note 1)	1.65 to 3.6	V
V_I	Input Voltage	0 to 5.5	V
V_O	Output Voltage (V_{CC} = 0V)	0 to 5.5	V
V_O	Output Voltage (High or Low State)	0 to V_{CC}	V
I_{OH}, I_{OL}	High or Low Level Output Current (V_{CC} = 3.0 to 3.6V)	± 24	mA
I_{OH}, I_{OL}	High or Low Level Output Current (V_{CC} = 2.7 to 3.0V)	± 12	mA
I_{OH}, I_{OL}	High or Low Level Output Current (V_{CC} = 2.3 to 2.7V)	± 8	mA
I_{OH}, I_{OL}	High or Low Level Output Current (V_{CC} = 1.65 to 2.3V)	± 4	mA
T_{op}	Operating Temperature	-55 to 125	°C
dt/dv	Input Rise and Fall Time (note 2)	0 to 10	ns/V

1) Truth Table guaranteed: 1.2V to 3.6V
2) V_{IN} from 0.8V to 2V at V_{CC} = 3.0V

Table 6: DC Specifications

Symbol	Parameter	Test Condition		Value				Unit
		V_{CC} (V)		-40 to 85 °C		-55 to 125 °C		
				Min.	Max.	Min.	Max.	
V_{IH}	High Level Input Voltage	1.65 to 1.95		0.65V_{CC}		0.65V_{CC}		V
		2.3 to 2.7		1.7		1.7		
		2.7 to 3.6		2		2		
V_{IL}	Low Level Input Voltage	1.65 to 1.95			0.35V_{CC}		0.35V_{CC}	V
		2.3 to 2.7			0.7		0.7	
		2.7 to 3.6			0.8		0.8	
V_{OH}	High Level Output Voltage	1.65 to 3.6	I_O=-100 µA	V_{CC}-0.2		V_{CC}-0.2		V
		1.65	I_O=-4 mA	1.2		1.2		
		2.3	I_O=-8 mA	1.7		1.7		
		2.7	I_O=-12 mA	2.2		2.2		
		3.0	I_O=-18 mA	2.4		2.4		
		3.0	I_O=-24 mA	2.2		2.2		
V_{OL}	Low Level Output Voltage	1.65 to 3.6	I_O=100 µA		0.2		0.2	V
		1.65	I_O=4 mA		0.45		0.45	
		2.3	I_O=8 mA		0.7		0.7	
		2.7	I_O=12 mA		0.4		0.4	
		3.0	I_O=24 mA		0.55		0.55	
I_I	Input Leakage Current	3.6	V_I = 0 to 5.5V		± 5		± 5	µA
I_{off}	Power Off Leakage Current	0	V_I or V_O = 5.5V		10		10	µA
I_{CC}	Quiescent Supply Current	3.6	V_I = V_{CC} or GND		10		10	µA
			V_I or V_O = 3.6 to 5.5V		± 10		± 10	
ΔI_{CC}	I_{CC} incr. per Input	2.7 to 3.6	V_{IH} = V_{CC}-0.6V		500		500	µA

Table 7: Dynamic Switching Characteristics

Symbol	Parameter	Test Condition		Value			Unit
		V_{CC} (V)		T_A = 25 °C			
				Min.	Typ.	Max.	
V_{OLP}	Dynamic Low Level Quiet Output (note 1)	3.3	C_L = 50pF V_{IL} = 0V, V_{IH} = 3.3V		0.8		V
V_{OLV}					-0.8		

1) Number of output defined as "n". Measured with "n-1" outputs switching from HIGH to LOW or LOW to HIGH. The remaining output is measured in the LOW state.

Table 8: AC Electrical Characteristics

Symbol	Parameter	Test Condition				Value				Unit
		V_{CC} (V)	C_L (pF)	R_L (Ω)	$t_s = t_r$ (ns)	-40 to 85 °C		-55 to 125 °C		
						Min.	Max.	Min.	Max.	
t_{PLH} t_{PHL}	Propagation Delay Time	1.65 to 1.95	30	1000	2.0		8.9		12	ns
		2.3 to 2.7	30	500	2.0		5.9		8.0	
		2.7	50	500	2.5		4.8		5.8	
		3.0 to 3.6	50	500	2.5	1	4.2	1	5.0	
t_{OSLH} t_{OSHL}	Output To Output Skew Time (note1, 2)	2.7 to 3.6					1		1	ns

1) Skew is defined as the absolute value of the difference between the actual propagation delay for any two outputs of the same device switching in the same direction, either HIGH or LOW (t_{OSLH} = | t_{PLHm} - t_{PLHn}|, t_{OSHL} = | t_{PHLm} - t_{PHLn}|
2) Parameter guaranteed by design

Table 9: Capacitive Characteristics

Symbol	Parameter	Test Condition		Value			Unit
		V_{CC} (V)		T_A = 25 °C			
				Min.	Typ.	Max.	
C_{IN}	Input Capacitance				4		pF
C_{PD}	Power Dissipation Capacitance (note 1)	1.8	f_{IN} = 10MHz		32		pF
		2.5			33		
		3.3			37		

1) C_{PD} is defined as the value of the IC's internal equivalent capacitance which is calculated from the operating current consumption without load. (Refer to Test Circuit). Average operating current can be obtained by the following equation. $I_{CC(opr)} = C_{PD} \times V_{CC} \times f_{IN} + I_{CC}/n$ (per circuit)

Figure 3: Test Circuit

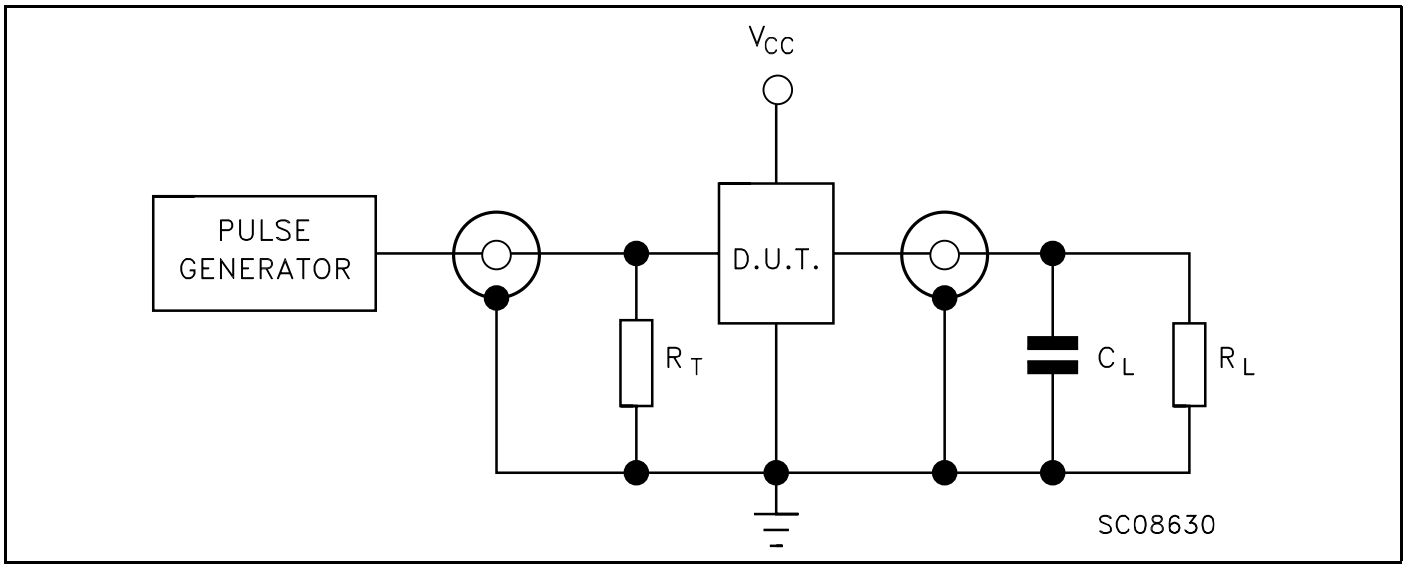

$R_T = Z_{OUT}$ of pulse generator (typically 50Ω)

Table 10: Test Circuit And Waveform Symbol Value

Symbol	V_{CC}			
	1.65 to 1.95V	2.3 to 2.7V	2.7V	3.0 to 3.6V
C_L	30pF	30pF	50pF	50pF
R_L	1000Ω	500Ω	500Ω	500Ω
V_{IH}	V_{CC}	V_{CC}	2.7V	2.7V
V_M	$V_{CC}/2$	$V_{CC}/2$	1.5V	1.5V
V_{OH}	V_{CC}	V_{CC}	3.0V	3.0V
$t_r = t_r$	<2.0ns	<2.0ns	<2.5ns	<2.5ns

Figure 4: Waveform: Propagation Delay (f=1MHz; 50% duty cycle)

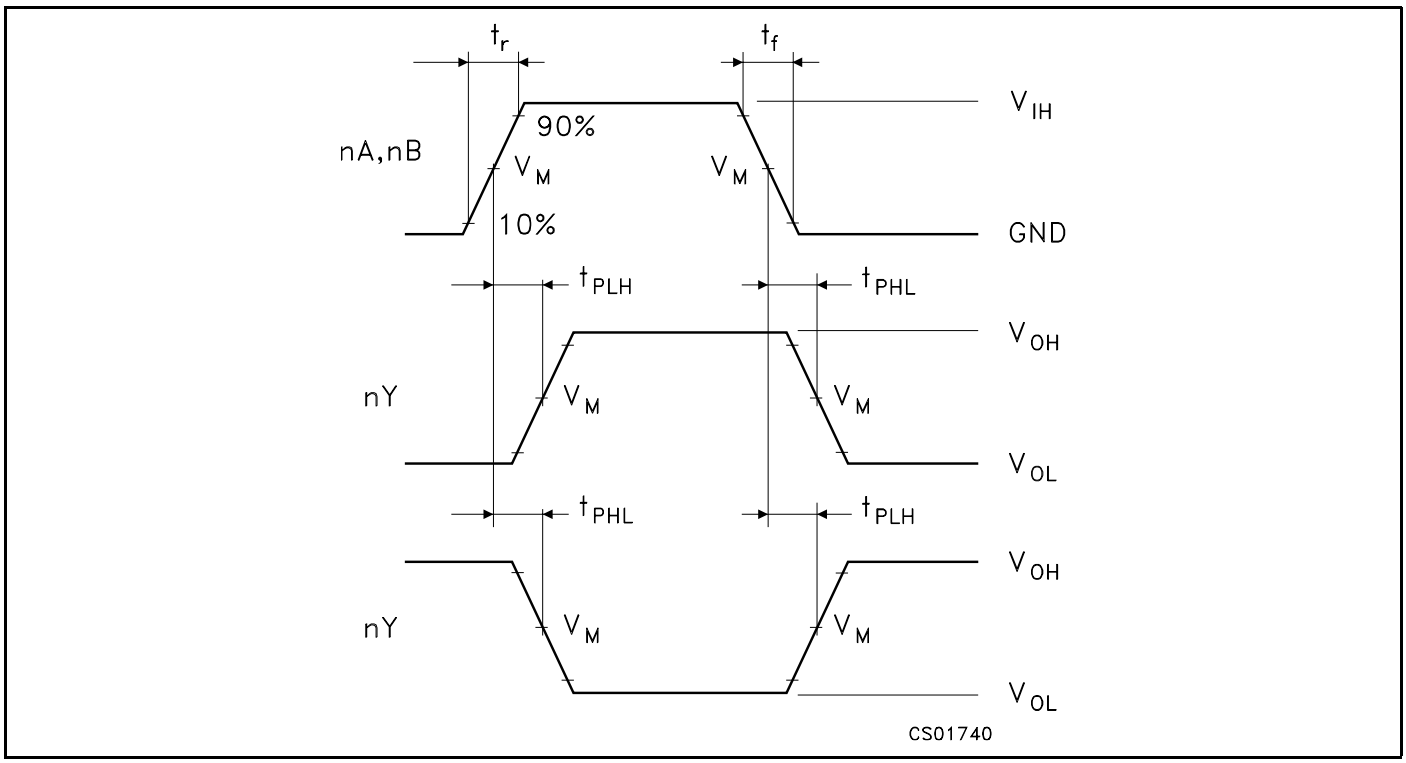

SO-14 MECHANICAL DATA

DIM.	mm.			inch		
	MIN.	TYP	MAX.	MIN.	TYP.	MAX.
A	1.35		1.75	0.053		0.069
A1	0.1		0.25	0.004		0.010
A2	1.10		1.65	0.043		0.065
B	0.33		0.51	0.013		0.020
C	0.19		0.25	0.007		0.010
D	8.55		8.75	0.337		0.344
E	3.8		4.0	0.150		0.157
e		1.27			0.050	
H	5.8		6.2	0.228		0.244
h	0.25		0.50	0.010		0.020
L	0.4		1.27	0.016		0.050
k	0°		8°	0°		8°
ddd			0.100			0.004

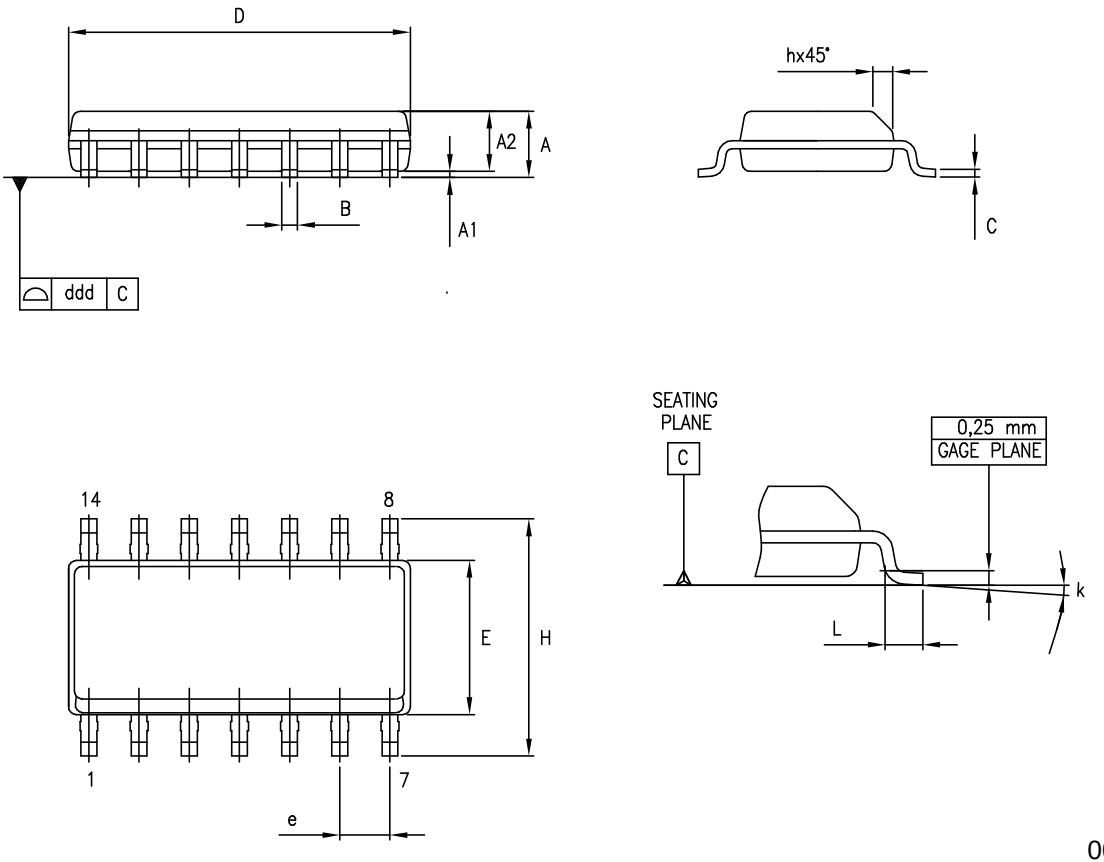

0016019D

TSSOP14 MECHANICAL DATA

DIM.	mm.			inch		
	MIN.	TYP	MAX.	MIN.	TYP.	MAX.
A			1.2			0.047
A1	0.05		0.15	0.002	0.004	0.006
A2	0.8	1	1.05	0.031	0.039	0.041
b	0.19		0.30	0.007		0.012
c	0.09		0.20	0.004		0.0089
D	4.9	5	5.1	0.193	0.197	0.201
E	6.2	6.4	6.6	0.244	0.252	0.260
E1	4.3	4.4	4.48	0.169	0.173	0.176
e		0.65 BSC			0.0256 BSC	
K	0°		8°	0°		8°
L	0.45	0.60	0.75	0.018	0.024	0.030

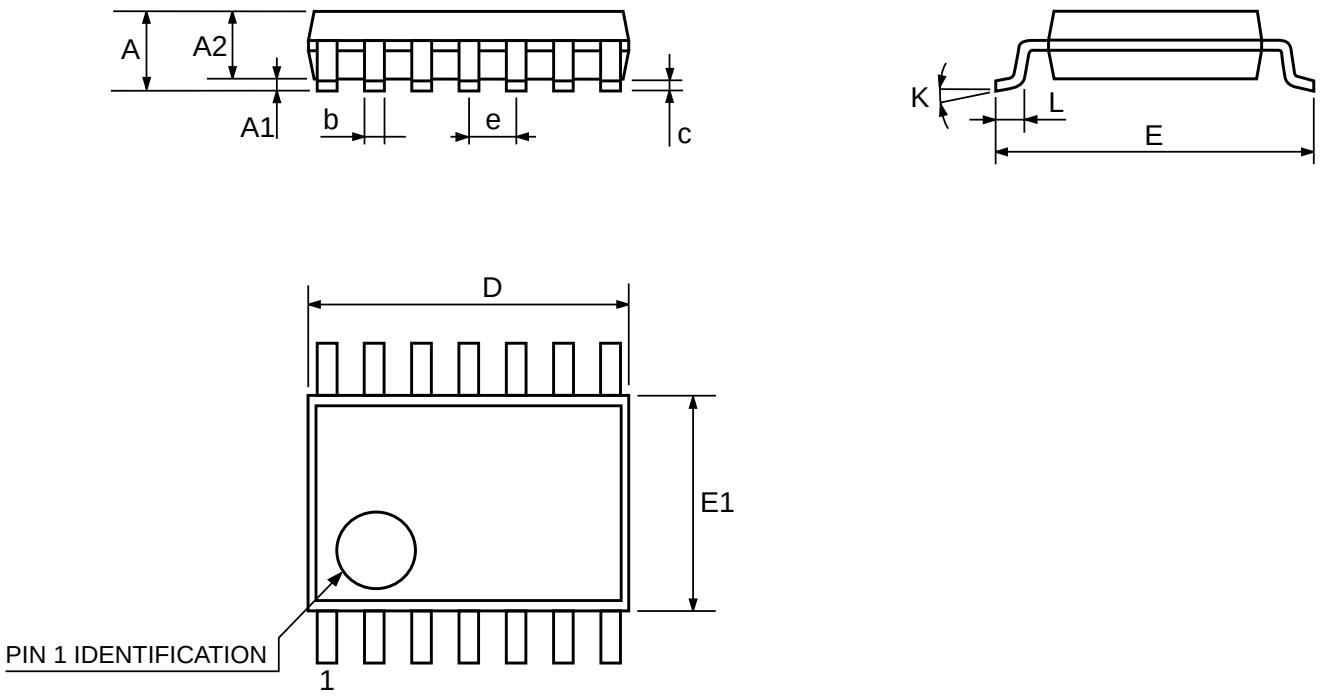

0080337D

Tape & Reel SO-14 MECHANICAL DATA

DIM.	mm.			inch		
	MIN.	TYP	MAX.	MIN.	TYP.	MAX.
A			330			12.992
C	12.8		13.2	0.504		0.519
D	20.2			0.795		
N	60			2.362		
T			22.4			0.882
Ao	6.4		6.6	0.252		0.260
Bo	9		9.2	0.354		0.362
Ko	2.1		2.3	0.082		0.090
Po	3.9		4.1	0.153		0.161
P	7.9		8.1	0.311		0.319

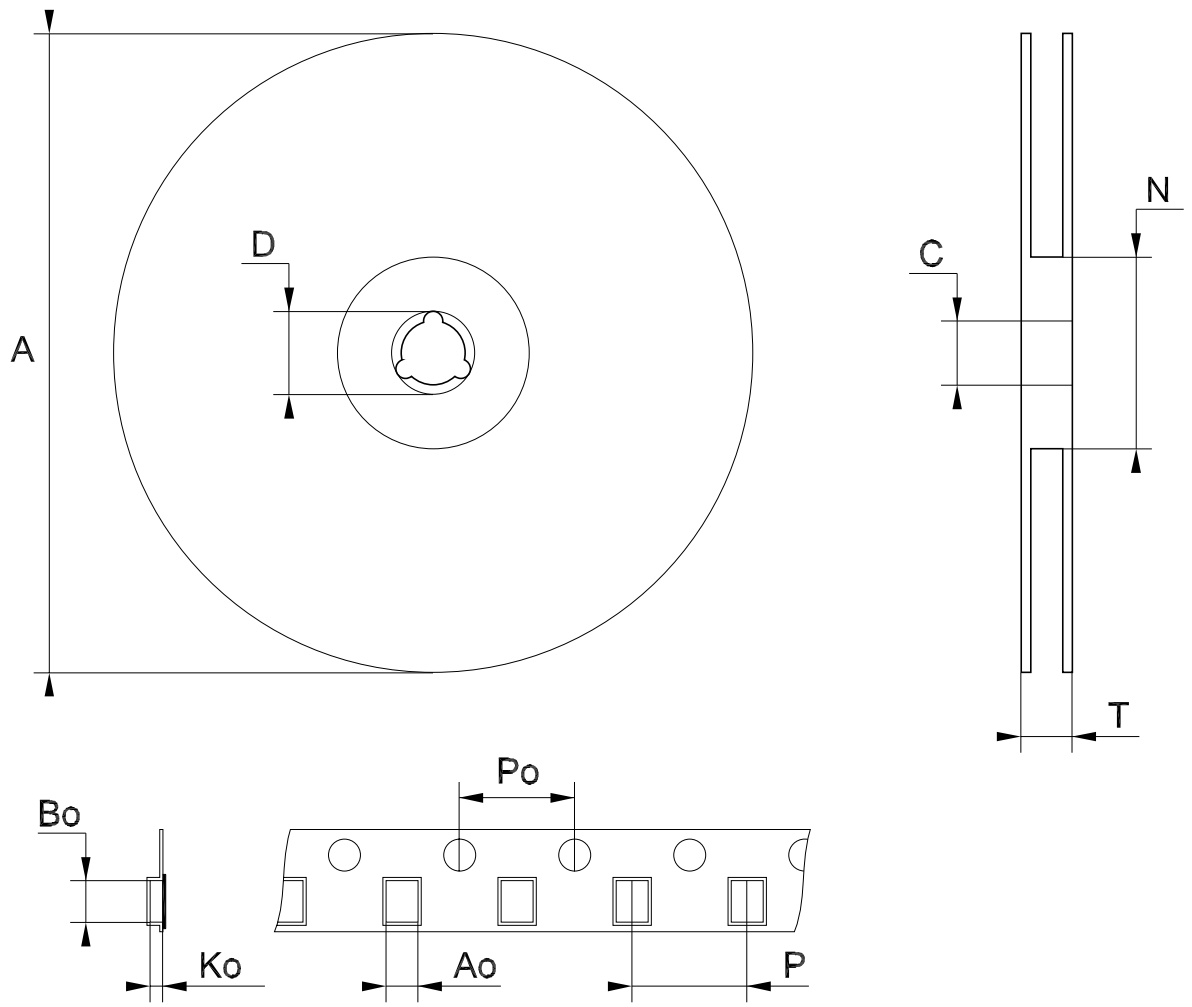

Note: Drawing not in scale

Tape & Reel TSSOP14 MECHANICAL DATA

DIM.	mm.			inch		
	MIN.	TYP	MAX.	MIN.	TYP.	MAX.
A			330			12.992
C	12.8		13.2	0.504		0.519
D	20.2			0.795		
N	60			2.362		
T			22.4			0.882
Ao	6.7		6.9	0.264		0.272
Bo	5.3		5.5	0.209		0.217
Ko	1.6		1.8	0.063		0.071
Po	3.9		4.1	0.153		0.161
P	7.9		8.1	0.311		0.319

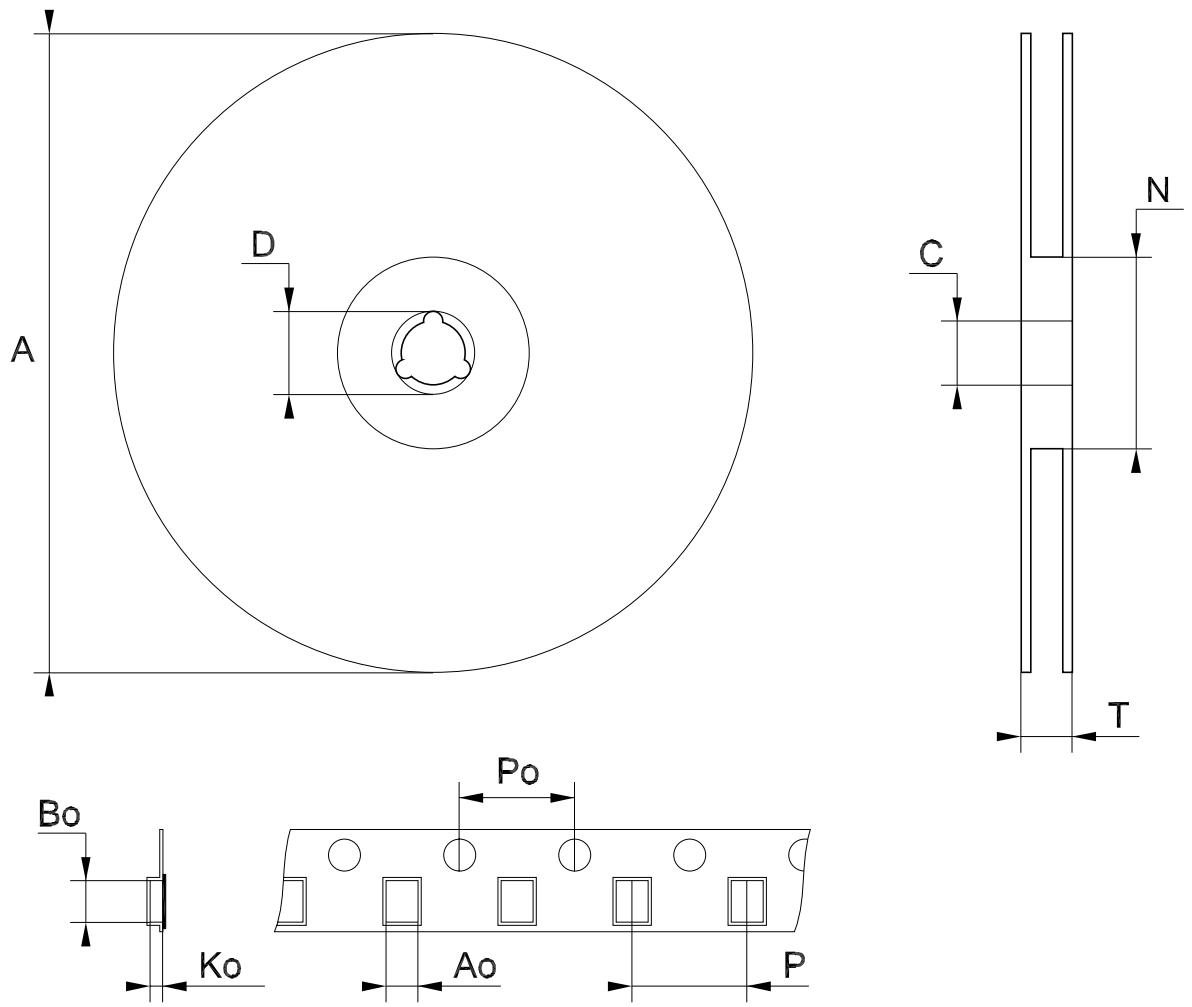

Note: Drawing not in scale

Table 11: Revision History

Date	Revision	Description of Changes
26-Jul-2004	4	Ordering Codes Revision - pag. 1.

Distributor of STMicroelectronics: Excellent Integrated System Limited
Datasheet of 74LVC86AMTR - IC GATE XOR 4CH 2-INP 14-SO
Contact us: sales@integrated-circuit.com Website: www.integrated-circuit.com

Information furnished is believed to be accurate and reliable. However, STMicroelectronics assumes no responsibility for the consequences of use of such information nor for any infringement of patents or other rights of third parties which may result from its use. No license is granted by implication or otherwise under any patent or patent rights of STMicroelectronics. Specifications mentioned in this publication are subject to change without notice. This publication supersedes and replaces all information previously supplied. STMicroelectronics products are not authorized for use as critical components in life support devices or systems without express written approval of STMicroelectronics.

The ST logo is a registered trademark of STMicroelectronics

All other names are the property of their respective owners

© 2004 STMicroelectronics - All Rights Reserved

STMicroelectronics group of companies

Australia - Belgium - Brazil - Canada - China - Czech Republic - Finland - France - Germany - Hong Kong - India - Israel - Italy - Japan - Malaysia - Malta - Morocco - Singapore - Spain - Sweden - Switzerland - United Kingdom - United States of America

www.st.com