Excellent Integrated System Limited

Stocking Distributor

Click to view price, real time Inventory, Delivery & Lifecycle Information:

Eaton (formerly Cooper Bussmann)
BK/HKP

For any questions, you can email us directly:
sales@integrated-circuit.com

¼" x 1 ¼" Fuse Holders

HKP Panel-Mount Series

Description

- For ¼" x 1 ¼" (6.3 x 32mm) fuses
- Maximum panel thickness 5⁄16" (7.9mm) thick
- Bayonet-type knob
- Vibration resistant
- Military version is designated FHN26G1
- Standard plastic nut
- Optional metal nut
- Cap – 9435-1/2
- Neoprene washer – 9732

RoHS 2002/95/EC

Agency Information

- UL Recognized: IZLT2, E14853
- CSA Component Acceptance: Class 6225-01, File 47235
- CE (HKP, HKP-L, HKP-W, HKP-OO)

Ordering

- Specify packaging, product, and option code
- Optional metal nut, order seperately part number BK/1A4806-2 (100 parts minimum)

Environmental Data

- Temperature rating (RTI): The mounting body for all devices has a temperature rating of 150°C. The knob for these devices are molded plastic with a temperature rating of 150°C.
- Meets UL 94HB
- Terminal Strength: 5 pounds
- Torque: Mounting – 20 inch-pound
- Salt Spray (corrosion): Test condition B

Dimensions - in (mm)

Drawing Not to Scale

HKP-BBHH, HKP-HH, HKP-LW-HH

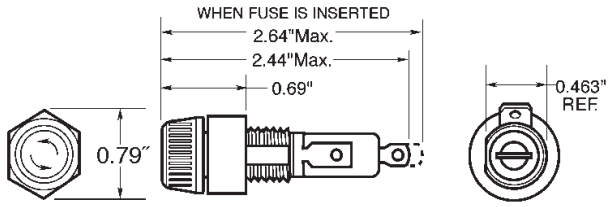

Punched Mounting Hole

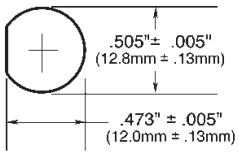

HKP, HKP-L, and HKP-W

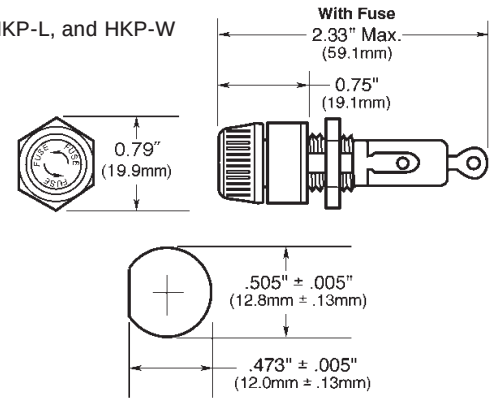

HKP-OO

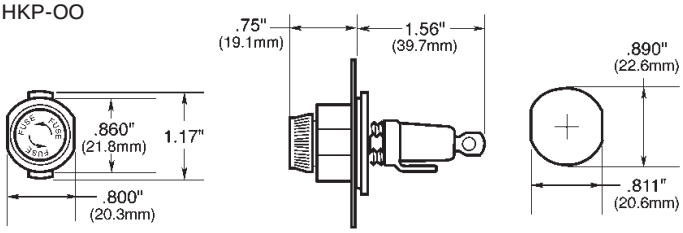

Component	Material
Terminal	Tin-Plated Brass
Body	Thermoset
Cap	Thermoset
Nut	Thermoplastic

Specifications			
Product Code	Feature	Voltage Rating	Current Rating
HKP	Standard	250V	30A
HKP-BBHH	¼" Quick-Connects, nut and washer assembled	250V	15A
HKP-HH	¼" Quick-Connects	250V	15A
HKP-L	2250 stand-off barrier	250V	30A
HKP-LW-HH	Drip-proof knob, 2250V stand-off barrier and ¼" quick connects	250V	15A
HKP-OO	Snap-lock	250V	30A
HKP-W	Drip-proof knob	250V	30A

Packaging	
Packaging Code Prefix	Description
Blank	10 fuseholders packed into a carton
BK	100 fuseholder components packed separately into a carton

Option Code	
Option Code Suffix	Description
-R	RoHS compliant version

The only controlled copy of this Data Sheet is the electronic read-only version located on the Cooper Bussmann Network Drive. All other copies of this document are by definition uncontrolled. This bulletin is intended to clearly present comprehensive product data and provide technical information that will help the end user with design applications. Cooper Bussmann reserves the right, without notice, to change design or construction of any products and to discontinue or limit distribution of any products. Cooper Bussmann also reserves the right to change or update, without notice, any technical information contained in this bulletin. Once a product has been selected, it should be tested by the user in all possible applications.

Life Support Policy: Cooper Bussmann does not authorize the use of any of its products for use in life support devices or systems without the express written approval of an officer of the Company. Life support systems are devices which support or sustain life, and whose failure to perform, when properly used in accordance with instructions for use provided in the labeling, can be reasonably expected to result in significant injury to the user.

© 2008 Cooper Bussmann
St. Louis, MO 63178
www.cooperbussmann.com