Excellent Integrated System Limited

Stocking Distributor

Click to view price, real time Inventory, Delivery & Lifecycle Information:

E-Switch
R1966ABLKBLKFS

For any questions, you can email us directly:
sales@integrated-circuit.com

Distributor of E-Switch: Excellent Integrated System Limited
Datasheet of R1966ABLKBLKFS - SWITCH ROCKER SPST 15A 125V
Contact us: sales@integrated-circuit.com Website: www.integrated-circuit.com

SHEET OF

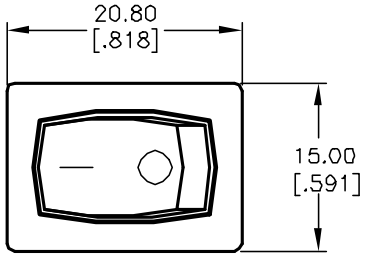

PANEL THICKNESS	X
0.75–1.25 [.030–.049]	19.2 [.756]
1.25–2.0 [.049–.079]	19.4 [.764]
2.0–3.0 [.079–.118]	19.8 [.780]

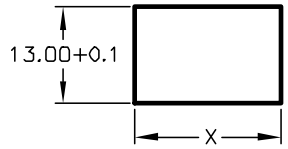

PANEL CUTOUT

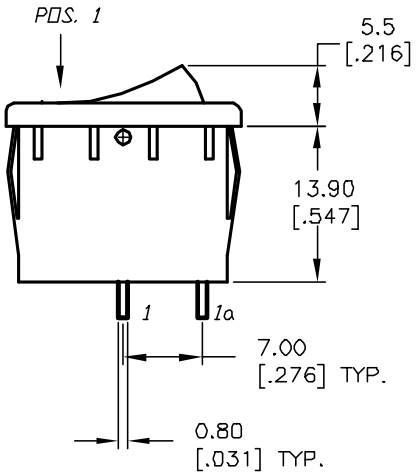

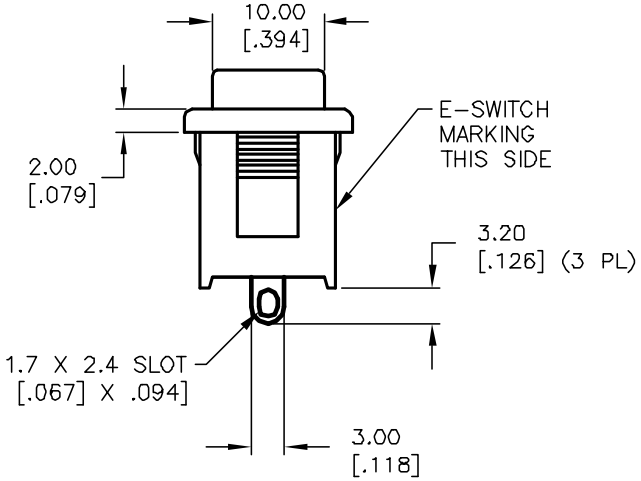

SWITCH FUNCTION	
POS. 1	POS. 2
ON	OFF
1–1a	OPEN

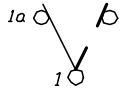

CIRCUIT: SPST

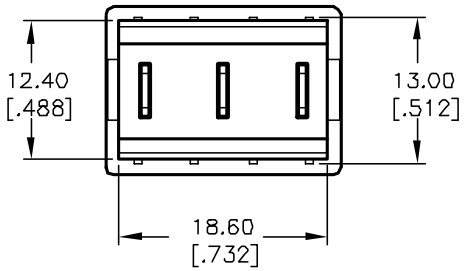

NOTES:
1. ALL DIMENSIONS IN MM [INCH]
2. GENERAL TOLERANCE: X.X=±0.4
   X.XX=±0.25
3. TERMINAL NUMBERS FOR REF ONLY.
4. RATING: 15A @ 125VAC OR 6A @ 250VAC
5. MECHANICAL LIFE: 15,000 cycles
6. ELECTRICAL LIFE: 10,000 cycles
7. INSULATION RESISTANCE: >1000 Mega Ω
8. CONTACT RESISTANCE: <20 Mega Ω
9. DIELECTRIC STRENGTH: >1500 V 1 minute
   >3000 V between poles

REV.	ECN No.	DESCRIPTION	DATE	CHKD
A	11664	RELEASED FOR PRODUCTION	9/19/01	CJB

THE INFORMATION CONTAINED IN THIS DOCUMENT IS PROPRIETARY TO E-SWITCH AND IS NOT TO BE COPIED OR TRANSFERRED

E-SWITCH®

TITLE R1966A BLK BLK F S

SCALE	DATE	DR	DWG	REV
1.5:1	9/19/01	CB	M301207	A