Excellent Integrated System Limited

Stocking Distributor

Click to view price, real time Inventory, Delivery & Lifecycle Information:

Analog Devices Inc.
AD7314ARMZ

For any questions, you can email us directly:
sales@integrated-circuit.com

Distributor of Analog Devices Inc.: Excellent Integrated System Limited
Datasheet of AD7314ARMZ - SENSOR TEMPERATURE SPI 8MSOP
Contact us: sales@integrated-circuit.com Website: www.integrated-circuit.com

Low Voltage, 10-Bit Digital Temperature Sensor in 8-Lead MSOP

AD7314

FEATURES

10-Bit Temperature-to-Digital Converter
–35°C to +85°C Operating Temperature Range
±2°C Accuracy
SPI® and DSP Compatible Serial Interface
Shutdown Mode
Space-Saving MSOP Package

APPLICATIONS

Hard Disk Drives
Personal Computers
Electronic Test Equipment
Office Equipment
Domestic Appliances
Process Control
Mobile Phones

FUNCTIONAL BLOCK DIAGRAM

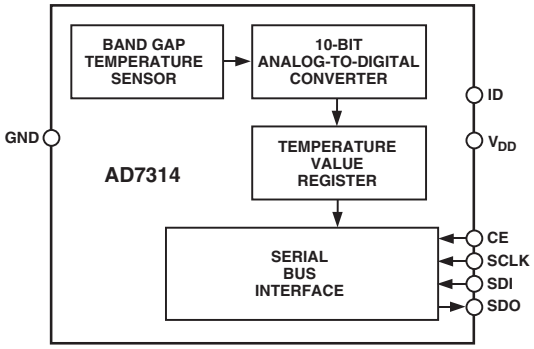

GENERAL DESCRIPTION

The AD7314 is a complete temperature monitoring system in an 8-lead MSOP package. It contains a band gap temperature sensor and 10-bit ADC to monitor and digitize the temperature reading to a resolution of 0.25°C.

The AD7314 has a flexible serial interface that allows easy interfacing to most microcontrollers. The interface is compatible with SPI, QSPI™, and MICROWIRE™ protocols and is also compatible with DSPs. The part features a standby mode that is controlled via the serial interface.

The AD7314's low supply current and SPI compatible interface make it ideal for a variety of applications, including personal computers, office equipment, and domestic appliances.

PRODUCT HIGHLIGHTS

1. The AD7314 has an on-chip temperature sensor that allows an accurate measurement of the ambient temperature. The measurable temperature range is –35°C to +85°C, with a ±2°C temperature accuracy.
2. Supply voltage of 2.65 V to 5.5 V.
3. Space-saving 8-lead MSOP package.
4. 10-bit temperature reading to 0.25°C resolution.
5. The AD7314 features a standby mode that reduces the current consumption to 1 µA max.

REV. A

Information furnished by Analog Devices is believed to be accurate and reliable. However, no responsibility is assumed by Analog Devices for its use, nor for any infringements of patents or other rights of third parties that may result from its use. No license is granted by implication or otherwise under any patent or patent rights of Analog Devices. Trademarks and registered trademarks are the property of their respective owners.

One Technology Way, P.O. Box 9106, Norwood, MA 02062-9106, U.S.A.
Tel: 781/329-4700 www.analog.com
Fax: 781/326-8703
© 2003 Analog Devices, Inc. All rights reserved.

AD7314–SPECIFICATIONS* ($T_A = T_{MIN}$ to T_{MAX}, V_{DD} = 2.65 V to 5.5 V, unless otherwise noted.)

Parameter	Min	Typ	Max	Unit	Test Conditions/Comments
TEMPERATURE SENSOR AND ADC					
Accuracy			±2.0	°C	T_A = –35°C to +85°C. V_{DD} = 2.65 V to 2.9 V
		±1.0		°C	T_A = –35°C to +85°C. V_{DD} = 3 V to 5.5 V
Resolution		10		Bits	
Update Rate, t_R		400		µs	
Temperature Conversion Time		25		µs	
SUPPLIES					
Supply Voltage	2.65		5.5	V	For Specified Performance
Supply Current					
Normal Mode (Inactive)		250	300	µA	Part Not Converting, V_{DD} = 2.65 V to 2.9 V
		275		µA	Part Not Converting, V_{DD} = 3 V to 5.5 V
Normal Mode (Active)		1		mA	Part Converting, V_{DD} = 2.65 V to 2.9 V
		1.2		mA	Part Converting, V_{DD} = 3 V to 5.5 V
Shutdown Mode			1	µA	V_{DD} = 2.65 V to 2.9 V
		1		µA	V_{DD} = 3 V to 5.5 V
Power Dissipation		860		µW	V_{DD} = 2.65 V. Using Normal Mode (Auto Conversion)
Power Dissipation					V_{DD} = 2.65 V. Using Shutdown Mode
1 SPS		3		µW	
10 SPS		3.3		µW	
100 SPS		6		µW	
DIGITAL INPUT					
Input High Voltage, V_{IH}	1.85			V	V_{DD} = 2.65 V to 2.9 V
Input Low Voltage, V_{IL}			0.53	V	V_{DD} = 2.65 V to 2.9 V
Input High Voltage, V_{IH}	2.4			V	V_{DD} = 3 V to 5.5 V
Input Low Voltage, V_{IL}			0.8	V	V_{DD} = 3 V to 5.5 V
Input Current, I_{IN}			±1	µA	V_{IN} = 0 V to V_{DD}
Input Capacitance, C_{IN}			10	pF	All Digital Inputs
DIGITAL OUTPUT					
Output High Voltage, V_{OH}	2.4			V	$I_{SOURCE} = I_{SINK}$ = 200 µA
Output Low Voltage, V_{OL}			0.4	V	I_{OL} = 200 µA
Output Capacitance, C_{OUT}			50	pF	

*All specifications apply for –35°C to +85°C, unless otherwise noted.
Specifications subject to change without notice.

TIMING CHARACTERISTICS[1, 2] (T_A[3] = T_{MIN} to T_{MAX}, V_{DD} = 2.65 V to 5.5 V, unless otherwise noted. See Figure 1.)

Parameter	Limit	Unit	Comments
t_1	0	ns min	CE to SCLK Setup Time
t_2	50	ns min	SCLK High Pulse Width
t_3	50	ns min	SCLK Low Pulse Width
t_4[4]	35	ns max	Data Access Time after SCLK Rising Edge
t_5	20	ns min	Data Setup Time prior to SCLK Falling Edge
t_6	0	ns min	Data Hold Time after SCLK Falling Edge
t_7	0	ns min	CE to SCLK Hold Time
t_8[4]	40	ns max	CE to SDO High Impedance

NOTES
[1]Guaranteed by design and characterization, not production tested.
[2]All input signals are specified with tr = tf = 5 ns (10% to 90% of V_{DD}) and are timed from a voltage level of 1.6 V.
[3]All specifications apply for –35°C to +85°C, unless otherwise noted.
[4]Measured with the load circuit of Figure 2.
Specifications subject to change without notice.

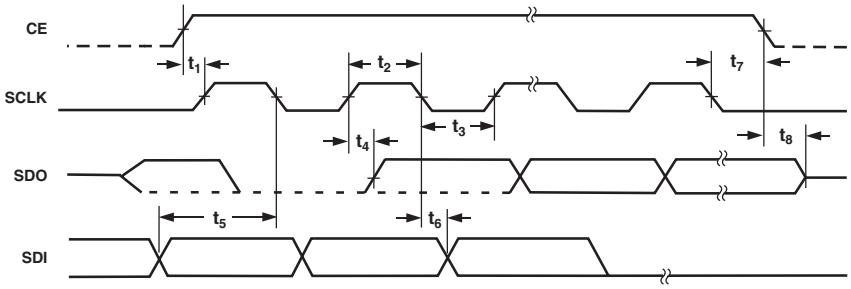

Figure 1. Timing Diagram

ABSOLUTE MAXIMUM RATINGS[1]

V_{DD} to GND . . . . . –0.3 V to +7 V
Digital Input Voltage to GND . . . . . –0.3 V to V_{DD} + 0.3 V
Digital Output Voltage to GND . . . . . –0.3 V to V_{DD} + 0.3 V
Operating Temperature Range . . . . . –35°C to +85°C
Storage Temperature Range . . . . . –65°C to +150°C
Junction Temperature . . . . . 150°C
MSOP Package, Power Dissipation . . . . . 450 mW
θ_{JA} Thermal Impedance . . . . . 206°C/W
Lead Temperature, Soldering
Vapor Phase (60 sec) . . . . . 215°C
Infrared (15 sec) . . . . . 220°C
Latch-Up for ID Pin[2] . . . . . ≤ –70 mA
Latch-Up for All Other Pins . . . . . ≥ –110 mA

NOTES
[1]Stresses above those listed under Absolute Maximum Ratings may cause permanent damage to the device. This is a stress rating only; functional operation of the device at these or any other conditions above those indicated in the operational section of this specification is not implied. Exposure to absolute maximum rating conditions for extended periods may affect device reliability.
[2]Correct usage of the ID pin will prevent any latch-up from occurring. In an application, the ID pin should be either tied to V_{DD} via a 100 kΩ resistor or left open circuit. If the application complies with this recommendation, the ID pin will never see –70 mA.

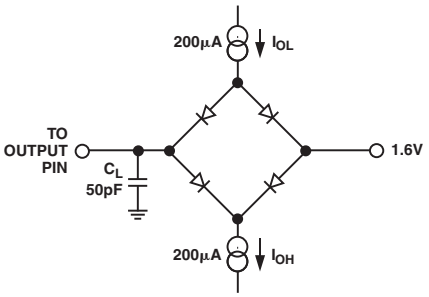

Figure 2. Load Circuit for Data Access Time and Bus Relinquish Time

ORDERING GUIDE

Model	Temperature Range	Temperature Error	Package Description	Package Option	Branding
AD7314ARM	–35°C to +85°C	±2°C	8-Lead MSOP	RM-8	CKA
AD7314ARM-REEL	–35°C to +85°C	±2°C	8-Lead MSOP	RM-8	CKA
AD7314ARM-REEL7	–35°C to +85°C	±2°C	8-Lead MSOP	RM-8	CKA
AD7314ARMZ*	–35°C to +85°C	±2°C	8-Lead MSOP	RM-8	CKA
AD7314ARMZ-REEL*	–35°C to +85°C	±2°C	8-Lead MSOP	RM-8	CKA
AD7314ARMZ-REEL7*	–35°C to +85°C	±2°C	8-Lead MSOP	RM-8	CKA

*Z = Lead Free.

CAUTION

ESD (electrostatic discharge) sensitive device. Electrostatic charges as high as 4000 V readily accumulate on the human body and test equipment and can discharge without detection. Although the AD7314 features proprietary ESD protection circuitry, permanent damage may occur on devices subjected to high energy electrostatic discharges. Therefore, proper ESD precautions are recommended to avoid performance degradation or loss of functionality.

PIN CONFIGURATION
8-Lead MSOP

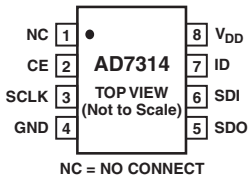

PIN FUNCTION DESCRIPTIONS

Pin No.	Mnemonic	Description
1	NC	No Connect.
2	CE	Chip Enable Input. The device is selected when this input is high. The SCLK input is disabled when this pin is low.
3	SCLK	Serial Clock Input. This is the clock input for the serial port. The serial clock is used to clock data out of the temperature value register of the AD7314 and also to clock data into the control register on the part.
4	GND	Analog and Digital Ground.
5	SDO	Serial Data Output. Logic output. Data is clocked out of the temperature value register at this pin.
6	SDI	Serial Data Input. Serial data to be loaded to the parts's control register is provided on this input.
7	ID	Identification. This pin can be used by a master device to identify the AD7314 in an SPI bus system. This pin has an internal pull-down resistor of 1 kΩ.
8	V_{DD}	Positive Supply Voltage, 2.65 V to 5.5 V.

CIRCUIT INFORMATION

The AD7314 is a 10-bit digital temperature sensor. The part houses an on-chip temperature sensor, a 10-bit A/D converter, and reference and serial interface logic functions in an MSOP package. The A/D converter section consists of a conventional successive approximation converter based around a capacitor DAC. The parts are capable of running on a 2.65 V to 5.5 V power supply.

The on-chip temperature sensor allows an accurate measurement of the ambient device temperature to be made. The working measurement range of the AD7314 is –35°C to +85°C.

CONVERTER DETAILS

The conversion clock for the part is internally generated so no external clock is required except when reading from and writing to the serial port. In normal mode, an internal clock oscillator runs the automatic conversion sequence. A conversion is initiated every 400 µs. At this time, the part wakes up and performs a temperature conversion. This temperature conversion typically takes 25 µs, at which time the part automatically shuts down. The result of the most recent temperature conversion is available in the serial output register at any time. The AD7314 can be placed in a shutdown mode, via the control register, in which case the on-chip oscillator is shut down and no further conversions are initiated until the AD7314 is taken out of shutdown mode. The conversion result from the last conversion prior to shutdown can still be read from the AD7314 even when it is in shutdown mode.

In the automatic conversion mode, every time a read or write operation takes place, the internal clock oscillator is restarted at the end of the read or write operation. The result of the conversion is available, typically 25 µs later. Similarly, when the part is taken out of shutdown mode, the internal clock oscillator is restarted and the conversion result is available, typically 25 µs later. Reading from the device again before conversion is complete will provide the same set of data.

Temperature Value Register

The temperature value register is a read-only register that stores the temperature reading from the ADC in 10-bit twos complement format. The temperature data format is shown in Table I. This shows the full theoretical range of the ADC from –128°C to +127°C, but in practice the temperature measurement range is limited to the operating temperature range of the device (–35°C to +85°C).

Table I. Temperature Data Format

Temperature (°C)	Digital Output DB9 . . . DB0
–128	10 0000 0000
–125	10 0000 1100
–100	10 0111 0000
–75	10 1101 0100
–50	11 0011 1000
–25	11 1001 1100
–0.25	11 1111 1111
0	00 0000 0000
0.25	00 0000 0001
10	00 0010 1000
25	00 0110 0100
50	00 1100 1000
75	01 0010 1100
100	01 1001 0000
125	01 1111 0100
127	01 1111 1100

Serial Interface

The serial interface on the AD7314 consists of four wires, CE, SCLK, SDI, and SDO. The interface can be operated in 3-wire mode with SDI tied to ground, in which case the interface has read-only capability, with data being read from the data register via the SDO line. The SDI line is used to write the part into standby mode, if required. The CE line is used to select the device when more than one device is connected to the serial clock and data lines. To ensure that the serial port is reset properly after power-up, the CE must be at a logic low before the first serial port access. The serial clock is active only when CE is high. For correct data synchronization, it is important that the CE be low when the serial port is not being accessed.

The part operates in a slave mode and requires an externally applied serial clock to the SCLK input to access data from the data register. The serial interface on the AD7314 is designed to allow the part to be interfaced to systems that provide a serial clock that is synchronized to the serial data, such as the 80C51, 87C51, 68HC11, 68HC05, and PIC16Cxx microcontrollers as well as DSP processors.

A read operation from the AD7314 accesses data from the temperature value register while a write operation to the part writes data to the control register. Input data is not loaded into the control register until the rising edge of the 15th SCLK cycle. Data on the SDI line is latched in on the falling edge of the serial clock while data is updated on the SDO line on the rising edge of the serial clock.

Read Operation

Figure 3 shows the interface diagram for a serial read from the AD7314. The CE line enables the SCLK input. A leading zero and 10 bits of data are transferred during a read operation. Read operations occur during streams of 16 clock pulses. Output data is updated on the rising edge of SCLK. The serial data is accessed in a number of bytes if 10 bits of data are being read. At the end of the read operation, the SDO line remains in the state of the last bit of data clocked out of the AD7314 until CE returns low, at which time the SDO line goes into three-state.

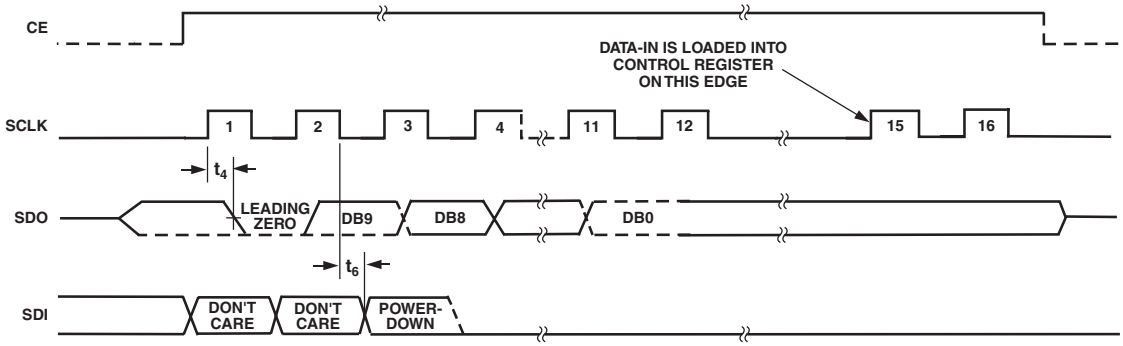

Figure 3. Serial Interface Diagram

Write Operation

Figure 3 also shows the interface diagram for a serial write to the AD7314. The write operation takes place at the same time as the read operation. Data is clocked into the control register on the falling edge of SCLK. Only the third bit in the data stream provides a user-controlled function. This third bit is the power-down bit which, when set to a 1, puts the AD7314 into shutdown mode. The first two bits of the data stream are don't cares while all other bits in the data stream other than the power-down bit should be 0 to ensure correct operation of the AD7314. Data is loaded into the control register on the 15th rising SCLK edge. The data takes effect at this time, i.e., if the part is programmed to go into shutdown, it does so at this point. If the CE is brought low before this 15th SCLK edge, the control register will not be loaded and the power-down status of the part will not change.

MICROCONTROLLER INTERFACING

The AD7314 serial interface allows for easy interface to most microcontrollers and microprocessors. A typical interface circuit is shown in Figure 4.

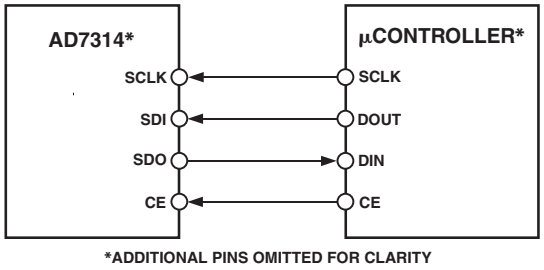

Figure 4. Typical Interface

The ID pin of the AD7314 can be used to distinguish the device if used as a drop-in replacement temperature sensor. Connected to Pin 7 (ID pin) is a 1 kΩ internal pull-down resistor. If a pull-up resistor is used on Pin 7 to aid in identifying a device, then a pull-up value of 100 kΩ with V_{DD} at 2.9 V nominal is recommended. Figure 5 shows the recommended pull-up resistor value for the ID pin. The recommended resistor value in Figure 5 minimizes the additional power the AD7314 has to dissipate, thus reducing any negative affects on the temperature sensor measurements.

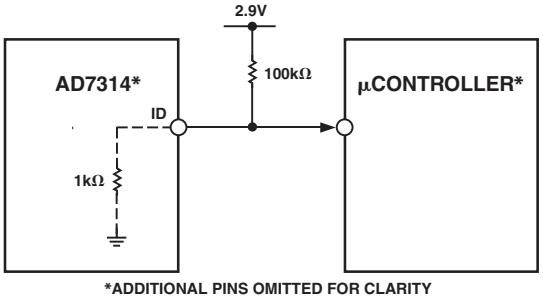

Figure 5. Typical ID Pin Interface

MOUNTING THE AD7314

The AD7314 can be used for surface or air temperature sensing applications. If the device is cemented to a surface with thermally conductive adhesive, the die temperature will be within about 0.1°C of the surface temperature, thanks to the device's low power consumption. Care should be taken to insulate the back and leads of the device from the air, if the ambient air temperature is different from the surface temperature being measured.

The ground pin provides the best thermal path to the die, so the temperature of the die will be close to that of the printed circuit ground track. Care should be taken to ensure that this is in good thermal contact with the surface being measured.

As with any IC, the AD7314 and its associated wiring and circuits must be kept free from moisture to prevent leakage and corrosion, particularly in cold conditions where condensation is more likely to occur. Water-resistant varnishes and conformal coatings can be used for protection. The small size of the AD7314 package allows it to be mounted inside sealed metal probes that provide a safe environment for the device.

SUPPLY DECOUPLING

The AD7314 should at least be decoupled with a 0.1 µF ceramic capacitor between V_{DD} and GND. This is particularly important if the AD7314 is mounted remote from the power supply.

TYPICAL TEMPERATURE ERROR GRAPHS

Figure 6 shows a typical temperature error plot for one device with V_{DD} at 2.65 V.

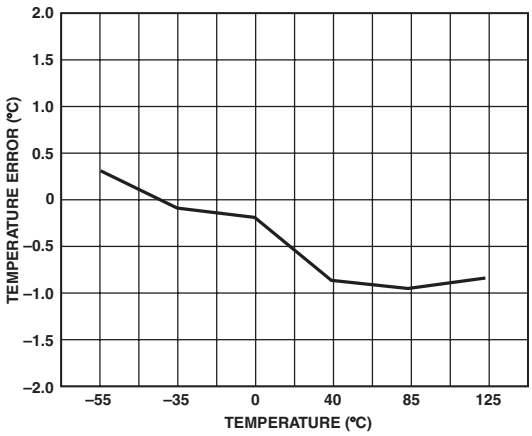

Figure 6. Typical Temperature Error @ 2.65 V

OUTLINE DIMENSIONS

8-Lead Mini Small Outline Package [MSOP]
(RM-8)
Dimensions shown in millimeters

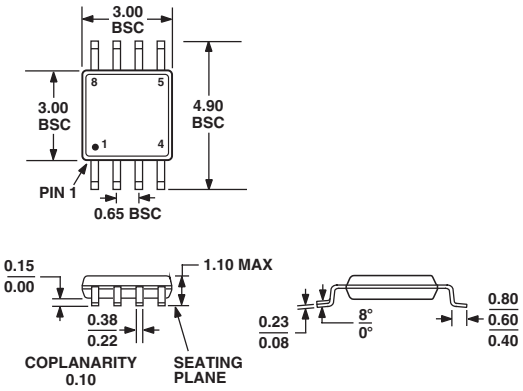

COMPLIANT TO JEDEC STANDARDS MO-187AA

C02414–0–10/03(A)

Revision History

Location	Page
10/03—Data Sheet changed from REV. 0 to REV. A.	
Change to PRODUCT HIGHLIGHTS	1
Changes to SPECIFICATIONS	2
Changes to ORDERING GUIDE	3
Change to PIN FUNCTION DESCRIPTIONS	4
Change to CIRCUIT INFORMATION section	5
Updated OUTLINE DIMENSIONS	8