# Excellent Integrated System Limited

Stocking Distributor

Click to view price, real time Inventory, Delivery & Lifecycle Information:

TE Connectivity AMP Connectors
1445720-1

For any questions, you can email us directly:
sales@integrated-circuit.com

THIS DRAWING IS UNPUBLISHED. RELEASED FOR PUBLICATION 20

© COPYRIGHT 20 BY TYCO ELECTRONICS CORPORATION. ALL RIGHTS RESERVED.

| LOC | DIST |
|---|---|
| - | - |

REVISIONS

| P | LTR | DESCRIPTION | DATE | DWN | APVD |
|---|---|---|---|---|---|
| | - | SEE SHEET 1 | - | - | - |

1. 3.18 MAX PANEL THICKNESS
2. PRELIMINARY PART NUMBER

| HOUSING COLOR | INDICATOR COLOR | CONTACT CIRCUITS | LATCH | A REF | PART NUMBER |
|---|---|---|---|---|---|
| WHITE | WHITE | 1,7 | BREAKAWAY | 30° | (2) 1-1445720-2 |
| BLACK | WHITE | 1,7 | POSITIVE | 0° | (2) 1-1445720-1 |
| WHITE | WHITE | 2,3,7 | BREAKAWAY | 30° | (2) 1-1445720-0 |
| BLACK | WHITE | 2,3,7 | POSITIVE | 0° | (2) 1445720-09 |
| WHITE | WHITE | 2,3,5,6 | BREAKAWAY | 30° | (2) 1445720-08 |
| BLACK | WHITE | 2,3,5,6 | POSITIVE | 0° | (2) 1445720-07 |
| WHITE | WHITE | 2,3,4,5,6 | BREAKAWAY | 30° | (2) 1445720-06 |
| BLACK | WHITE | 2,3,4,5,6 | POSITIVE | 0° | (2) 1445720-05 |
| WHITE | WHITE | 1,2,3,5,6,7 | BREAKAWAY | 30° | (2) 1445720-04 |
| BLACK | WHITE | 1,2,3,5,6,7 | POSITIVE | 0° | (2) 1445720-03 |
| WHITE | WHITE | ALL | BREAKAWAY | 30° | (2) 1445720-02 |
| BLACK | WHITE | ALL | POSITIVE | 0° | 1445720-01 |

THIS DRAWING IS A CONTROLLED DOCUMENT FOR TYCO ELECTRONICS CORPORATION. IT IS PROPRIETARY AND MUST NOT BE REPRODUCED OR DISTRIBUTED. CHANGES MAY BE MADE WITHOUT PRIOR NOTICE.

DWN S SHANE WILSON 01AUG2001
CHK G DOUTY 01AUG2001
APVD -

DIMENSIONS: mm

TOLERANCES UNLESS OTHERWISE SPECIFIED:
0 PLC ±-
1 PLC ±-
2 PLC ±0.13
3 PLC ±-
4 PLC ±-
ANGLES ±-

MATERIAL -
FINISH -

PRODUCT SPEC -
APPLICATION SPEC -
WEIGHT -

Tyco Electronics
Tyco Electronics
Harrisburg, PA 17105-3608

NAME ASSEMBLY, RECEPTACLE, SOLDER TAIL, PANEL MOUNT, 7 POSITION, MICRO CPC

| SIZE | CAGE CODE | DRAWING NO | RESTRICTED TO |
|---|---|---|---|
| A2 | 00779 | C-1445720 | - |

CUSTOMER DRAWING SCALE 5:1 SHEET 2 OF 2 REV 10

AMP 1471-9 REV 31MAR2000

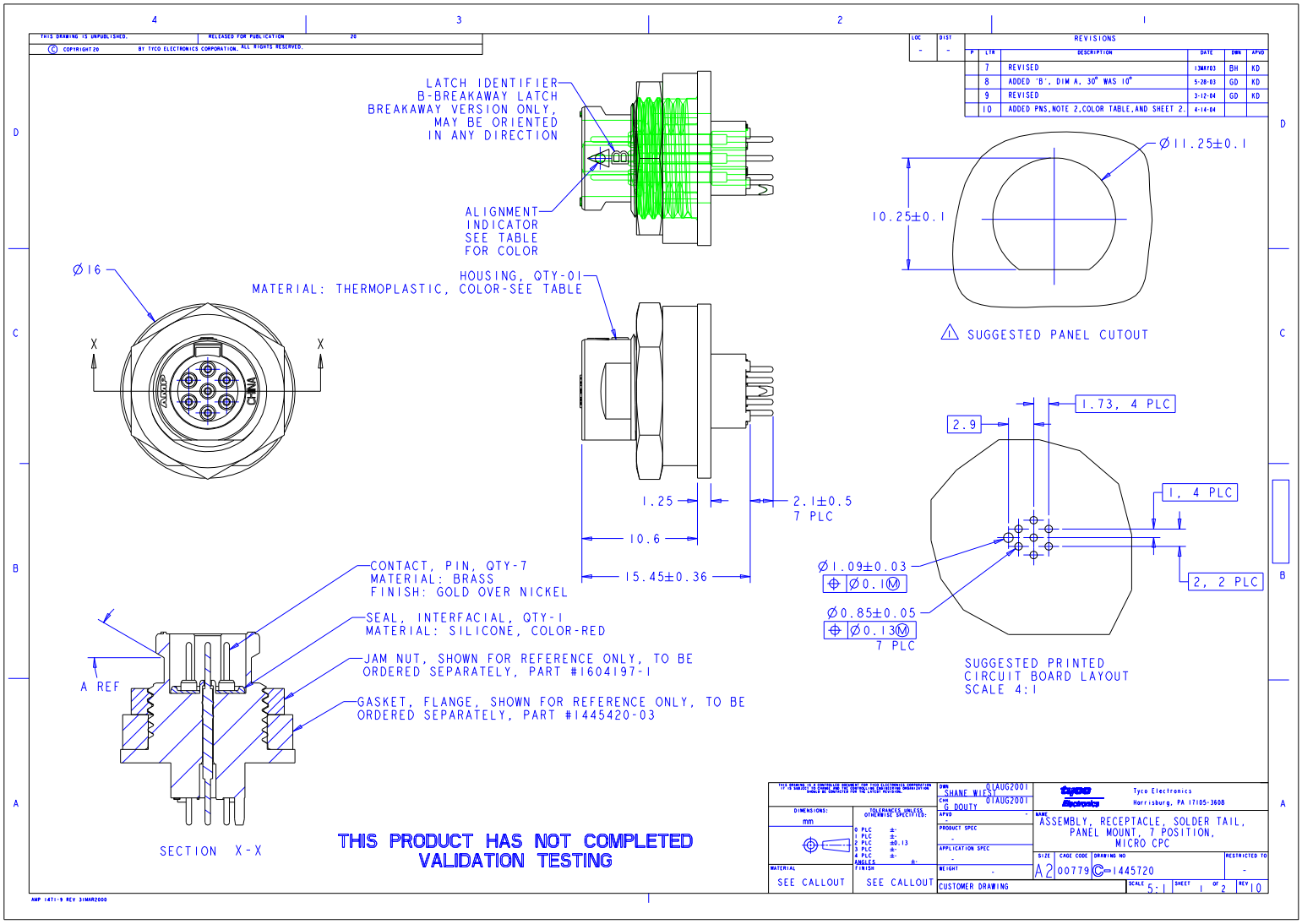
THIS DRAWING IS UNPUBLISHED.
RELEASED FOR PUBLICATION 20
© COPYRIGHT 20 BY TYCO ELECTRONICS CORPORATION. ALL RIGHTS RESERVED.
REVISIONS
7 REVISED 13MAY03 BH KD
8 ADDED 'B', DIM A, 30° WAS 10° 5-28-03 GD KD
9 REVISED 3-12-04 GD KD
10 ADDED PNS,NOTE 2,COLOR TABLE,AND SHEET 2. 4-14-04
LATCH IDENTIFIER
B-BREAKAWAY LATCH
BREAKAWAY VERSION ONLY,
MAY BE ORIENTED
IN ANY DIRECTION
ALIGNMENT
INDICATOR
SEE TABLE
FOR COLOR
Ø11.25±0.1
10.25±0.1
SUGGESTED PANEL CUTOUT
Ø16
MATERIAL: THERMOPLASTIC, COLOR-SEE TABLE
HOUSING, QTY-01
X
X
1.25
2.1±0.5
7 PLC
10.6
15.45±0.36
1.73, 4 PLC
2.9
1, 4 PLC
2, 2 PLC
Ø1.09±0.03
Ø0.1Ⓜ
Ø0.85±0.05
Ø0.13Ⓜ
7 PLC
SUGGESTED PRINTED
CIRCUIT BOARD LAYOUT
SCALE 4:1
CONTACT, PIN, QTY-7
MATERIAL: BRASS
FINISH: GOLD OVER NICKEL
SEAL, INTERFACIAL, QTY-1
MATERIAL: SILICONE, COLOR-RED
JAM NUT, SHOWN FOR REFERENCE ONLY, TO BE
ORDERED SEPARATELY, PART #1604197-1
GASKET, FLANGE, SHOWN FOR REFERENCE ONLY, TO BE
ORDERED SEPARATELY, PART #1445420-03
A REF
SECTION X-X
THIS PRODUCT HAS NOT COMPLETED
VALIDATION TESTING
DIMENSIONS: mm
TOLERANCES UNLESS OTHERWISE SPECIFIED:
0 PLC ±-
1 PLC ±-
2 PLC ±0.13
3 PLC ±-
4 PLC ±-
ANGLES ±-
MATERIAL SEE CALLOUT
FINISH SEE CALLOUT
DWN SHANE WIEST 01AUG2001
CHK G DOUTY 01AUG2001
APVD -
PRODUCT SPEC -
APPLICATION SPEC -
WEIGHT -
CUSTOMER DRAWING
Tyco Electronics
Harrisburg, PA 17105-3608
NAME ASSEMBLY, RECEPTACLE, SOLDER TAIL, PANEL MOUNT, 7 POSITION, MICRO CPC
SIZE A2
CAGE CODE 00779
DRAWING NO C-1445720
RESTRICTED TO -
SCALE 5:1
SHEET 1 OF 2
REV 10
AMP 1471-9 REV 31MAR2000