Excellent Integrated System Limited

Stocking Distributor

Click to view price, real time Inventory, Delivery & Lifecycle Information:

BUD Industries, Inc.
AN-2814

For any questions, you can email us directly:
sales@integrated-circuit.com
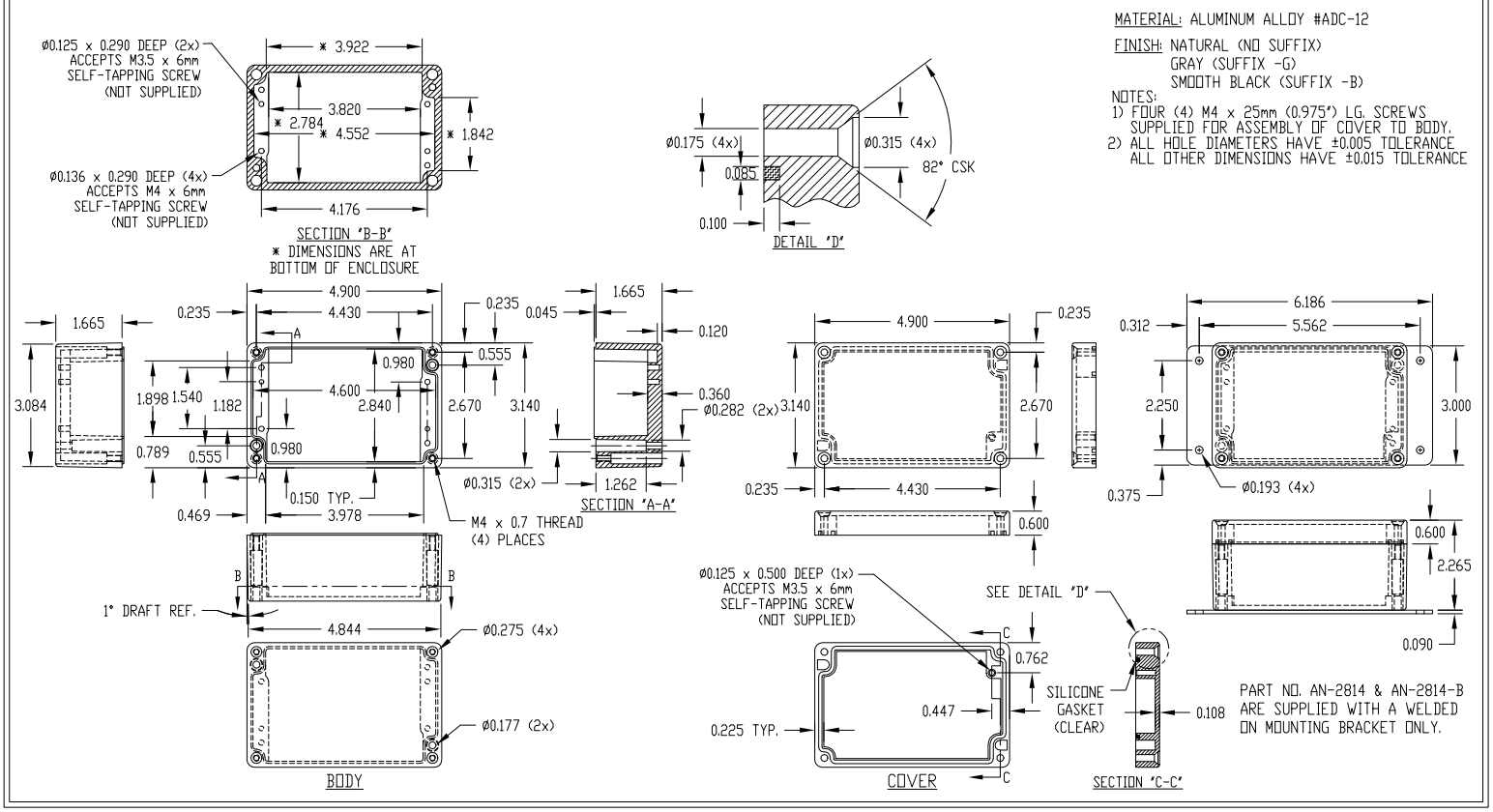
PART NAME	NEMA 4X DIE CAST ALUMINUM ENCLOSURE	PART No.	AN-1314, AN-1314-G, AN-2814 & AN-2814-B	REV. DATE	12-17-08